MOUNTING AND OPERATING INSTRUCTIONS

EB 8493 EN

Translation of original instructions

HART COMMUNICATION PROTOCOL

Series 3793
TROVIS 3793 Smart Positioner (HART®)

HV 02.00.00 · SV 01.01.xx

CE Ex certified

Edition April 2025

Note on these mounting and operating instructions

These mounting and operating instructions assist you in mounting and operating the device safely. The instructions are binding for handling SAMSON devices. The images shown in these instructions are for illustration purposes only. The actual product may vary.

➔ For the safe and proper use of these instructions, read them carefully and keep them for later reference.

➔ If you have any questions about these instructions, contact SAMSON's After-sales Service (aftersalesservice@samsongroup.com).

Documents relating to the device, such as the mounting and operating instructions, are available on our website at ***www.samsongroup.com > Downloads > Documentation***.

Definition of signal words

⚠ DANGER

Hazardous situations which, if not avoided, will result in death or serious injury

⚠ WARNING

Hazardous situations which, if not avoided, could result in death or serious injury

NOTICE

Property damage message or malfunction

Note

Additional information

Tip

Recommended action

1 Safety instructions and measures 1-1
1.1 Notes on possible severe personal injury 1-4
1.2 Notes on possible personal injury 1-5
1.3 Notes on possible property damage 1-5
2 Markings on the device 2-1
2.1 Nameplate 2-1
2.1.1 Option modules 2-2
2.1.2 Electronic module 2-2
2.2 Hardware versions 2-3
2.3 Software versions 2-3
2.4 Article code 2-4
3 Design and principle of operation 3-1
3.1 Optional modules 3-3
3.1.1 Pneumatic modules 3-3
3.1.2 Option modules 3-6
3.2 Mounting versions 3-9
3.3 Configuration using the TROVIS-VIEW software 3-9
3.4 Technical data 3-10
3.5 Dimensions in mm 3-16
3.6 Fixing levels according to VDI/VDE 3845 (September 2010) 3-20
4 Shipment and on-site transport 4-1
4.1 Accepting the delivered goods 4-1
4.2 Removing the packaging from the positioner and modules 4-1
4.3 Transporting the packaging from the positioner and modules 4-1
4.4 Storing the positioner and modules 4-1
5 Installation 5-1
5.1 Installation conditions 5-1
5.2 Preparation for installation 5-2
5.2.1 Adjusting the lever and pin position 5-2
5.2.2 Installing and removing pneumatic modules 5-6
5.2.3 Installing and removing option modules 5-8
5.2.4 Preparing option modules for use 5-12
5.3 Positioner attachment 5-17
5.3.1 Mounting on Type 3277 Actuator 5-17
5.3.2 Attachment according to IEC 60534-6 5-20
5.3.3 Attachment according to VDI/VDE 3847 5-22

5.3.4 Attachment according to VDI/VDE 3845 and to Type 3278, VETEC S160 and R 5-34
5.4 Mounting the external position sensor 5-36
5.4.1 Mounting for Type 3277 Actuator 5-36
5.4.2 Mounting according to IEC 60534-6 (NAMUR) 5-38
5.4.3 Mounting on rotary actuators 5-39
5.5 Pneumatic connection 5-40
5.5.1 Signal pressure connection 5-41
5.5.2 Output signal display 5-41
5.5.3 Supply pressure 5-41
5.5.4 Typical applications and hook-ups 5-42
5.6 Establishing electrical connections 5-45
5.6.1 Establishing HART® communication 5-47
5.6.2 Switching amplifier according to EN 60947-5-6 5-47
5.7 Mounting accessories 5-53
6 Operation 6-1
6.1 Rotary pushbutton 6-2
6.2 Initialization key (INIT) 6-2
6.3 Switch for forced venting 6-3
6.4 Display 6-3
6.4.1 Menu structure 6-4
6.4.2 Display icons 6-6
6.4.3 Changing the display's reading direction 6-7
6.5 HART® communication 6-7
6.5.1 Dynamic HART® variables 6-8
7 Start-up and configuration 7-1
7.1 Enabling configuration 7-2
7.2 Setting start-up parameters 7-2
7.2.1 Actuator type 7-3
7.2.2 Pin position 7-3
7.2.3 Nominal range 7-4
7.2.4 Initialization mode 7-4
7.2.5 Fail-safe action 7-7
7.2.6 Pneumatic primary output 7-8
7.2.7 Software restriction 7-8
7.2.8 'External position sensor' function 7-10
7.3 Initializing the positioner 7-11

7.4 Configuring option modules 7-12
7.4.1 Adjusting the switching points (when limit switches are used) 7-12

8 Setup 8-1
8.1 Changing the operating mode 8-1
8.2 Performing zero calibration 8-2
8.3 Resetting the positioner 8-3

9 Malfunction 9-1
9.1 Troubleshooting 9-2
9.2 Emergency action 9-8

10 Servicing 10-1
10.1 Cleaning the cover window 10-1
10.2 Periodic inspection and testing of the positioner 10-2

11 Decommissioning 11-1

12 Removal 12-1

13 Repairs 13-1
13.1 Returning devices to SAMSON 13-1

14 Disposal 14-1

15 Certificates 15-1

16 Appendix A (configuration instructions) 16-1
16.1 Structure of the main display 16-1
16.2 Menu structure and parameters (main menu) 16-1
16.2.1 Parameters for on-site operation 16-2
16.2.2 Readable process data 16-45
16.2.3 Diagnosis/maintenance 16-47
16.2.4 Diagnosis: status messages 16-57
16.2.5 Reset functions 16-64
16.3 Valve characteristic selection 16-65

17 Appendix B 17-1
17.1 After-sales service 17-1

1 Safety instructions and measures

Intended use

The SAMSON TROVIS 3793 Positioner is mounted on pneumatic control valves and used to assign the valve position to the control signal. The device can be upgraded by adding pneumatic modules and/or option modules and is designed to operate under exactly defined conditions (e.g. operating pressure, temperature). Therefore, operators must ensure that the positioner is only used in applications where the operating conditions correspond to the technical data. In case operators intend to use the positioner in applications or conditions other than those specified, contact SAMSON.

SAMSON does not assume any liability for damage resulting from the failure to use the device for its intended purpose or for damage caused by external forces or any other external factors.

➔ Refer to the technical data for limits and fields of application as well as possible uses.

Reasonably foreseeable misuse

The TROVIS 3793 Positioner is ***not*** suitable for the following applications:

– Use outside the limits defined during sizing and by the technical data

Furthermore, the following activities do not comply with the intended use:

– Use of non-original spare parts

– Performing maintenance activities not described in these instructions

Qualifications of operating personnel

The positioner must be mounted, started up and serviced by fully trained and qualified personnel only; the accepted industry codes and practices must be observed. According to these mounting and operating instructions, trained personnel refers to individuals who are able to judge the work they are assigned to and recognize possible hazards due to their specialized training, their knowledge and experience as well as their knowledge of the applicable standards.

Explosion-protected versions of this device must be operated only by personnel who has undergone special training or instructions or who is authorized to work on explosion-protected devices in hazardous areas.

Personal protective equipment

No personal protective equipment is required for the direct handling of the positioner. Work on the control valve may be necessary when mounting or removing the device.

➔ Observe the requirements for personal protective equipment specified in the valve documentation.

➔ Check with the plant operator for details on further protective equipment.

Revisions and other modifications

Revisions, conversions or other modifications of the product are not authorized by SAMSON. They are performed at the user's own risk and may lead to safety hazards, for example. Furthermore, the product may no longer meet the requirements for its intended use.

Safety features

Upon failure of the air supply, the positioner vents the actuator, causing the valve to move to the fail-safe position determined by the actuator. If a fail-in-place module is installed, it causes the pneumatic actuator to move to a position between the operating point and fail-safe position depending on the actuator size and the pressure range. As a result, emergency venting of the actuator is not guaranteed.

Upon failure of the electrical signal, the pneumatic outputs of the positioner are either vented or supplied with air. If a fail-in-place module is installed, it causes the pneumatic actuator to remain in its last position.

Warning against residual hazards

The positioner has direct influence on the control valve. To avoid personal injury or property damage, plant operators and operating personnel must prevent hazards that could be caused in the control valve by the process medium, the operating pressure, the signal pressure or by moving parts by taking appropriate precautions. Plant operators and operating personnel must observe all hazard statements, warnings and caution notes in these mounting and operating instructions, especially for installation, start-up and service work.

If inadmissible motions or forces are produced in the pneumatic actuator as a result of the supply pressure, it must be restricted using a suitable supply pressure reducing station.

Responsibilities of the operator

Operators are responsible for proper use and compliance with the safety regulations. Operators are obliged to provide these mounting and operating instructions to the operating personnel and to instruct them in proper operation. Furthermore, operators must ensure that operating personnel or third parties are not exposed to any danger.

Responsibilities of operating personnel

Operating personnel must read and understand these mounting and operating instructions as well as the specified hazard statements, warnings and caution notes. Furthermore, the operating personnel must be familiar with the applicable health, safety and accident prevention regulations and comply with them.

Servicing explosion-protected devices

If a part of the device on which the explosion protection is based needs to be serviced, the device must not be put back into operation until a qualified inspector has assessed it according to explosion protection requirements, has issued an inspection certificate or given the device a mark of conformity. Inspection by a qualified inspector is not required if the manufacturer performs a routine test on the device before putting it back into operation and the passing of the routine test is documented by attaching a mark of conformity to the device. Replace explosion-protected components only with original, routine-tested components by the manufacturer.

Devices that have already been operated outside hazardous areas and are intended for future use inside hazardous areas must comply with the safety requirements placed on serviced devices. Before being operated inside hazardous areas, test the devices according to the specifications for servicing explosion-protected devices.

Maintenance, calibration and work on equipment

➔ Only use intrinsically safe current/voltage calibrators and measuring instruments for interconnection with intrinsically safe circuits to check or calibrate the equipment inside or outside hazardous areas.

➔ Observe the maximum permissible values specified in the certificates for intrinsically safe circuits.

Referenced standards, directives and regulations

Devices with a CE marking fulfill the requirements of the Directives:

– TROVIS 3793 (Option M, N, P, T, V): 2014/30/EU and 2011/65/EU
– TROVIS 3793-110, -510 and -810: 2014/30/EU, 2014/34/EU and 2011/65/EU
– TROVIS 3793-850: 2014/30/EU, 2014/34/EU and 2011/65/EU

Referenced documents

The following documents apply in addition to these mounting and operating instructions:

– Operating instructions for valve diagnostics: ▶ EB 8389-2
– Configuration manual for HART® communication: ▶ KH 8384-3

– The mounting and operating instructions of the components on which the positioner is mounted (valve, actuator, valve accessories etc.).

1.1 Notes on possible severe personal injury

⚠ DANGER

Risk of fatal injury due to the ignition of an explosive atmosphere.

Work performed incorrectly on the positioner in potentially explosive atmospheres may lead to ignition of the atmosphere and ultimately to death.

➔ Observe EN 60079-14 (VDE 0165, Part 1) for work on the positioner in potentially explosive atmospheres.

➔ Work in potentially explosive atmospheres is to be performed only by personnel who has undergone special training or instructions or who is authorized to work on explosion-protected devices in hazardous areas.

Risk of bursting in the pneumatic actuator due to the use of a fail-in-place module.

When a positioner with fail-in-place module is used, the pneumatic actuator may still be pressurized after the electric power or air supply is disconnected. Pneumatic actuators are pressure equipment that may burst when handled incorrectly. Flying projectile fragments or components can cause serious injury or even death.

Before working on the positioner, actuator or any other valve accessories:

➔ Depressurize all plant sections concerned and the actuator. Release any stored energy.

1.2 Notes on possible personal injury

⚠ WARNING

Crush hazard arising from actuator and plug stem moving.

The valve moves through its working range while the air supply is connected to the positioner.

➔ Do not insert hands or finger into the yoke while the air supply is connected to the positioner.

➔ Before working on the positioner, disconnect and lock the pneumatic air supply.

➔ Do not impede the movement of the actuator and plug stem by inserting objects into the yoke.

1.3 Notes on possible property damage

NOTICE

Risk of damage to the positioner due to incorrect mounting position.

➔ Do not mount the positioner with the back of the device facing upward.

➔ Do not seal or restrict the vent opening when the device is installed on site.

An incorrect electric signal will damage the positioner.

A current source must be used to power the positioner.

➔ Only use a current source and never a voltage source.

Incorrect assignment of the terminals will damage the positioner and will lead to malfunction.

For the positioner to function properly, the prescribed terminal assignment, especially at the option modules used, must be observed.

➔ Connect the electrical wiring to the positioner and option modules according to the prescribed terminal assignment.

Electrostatic discharge will damage the option modules.

Components at risk can be destroyed by even small electrostatic discharge.

➔ Observe the ESD requirements according to IEC 61340-5-1.

➔ Only store option modules in their original packaging.

Risk of damage of the positioner and option modules due to incorrectly assigned slots.

The slots for the option modules are predesignated (see the 'Installation' chapter).

➔ Only insert option modules in their designated slots.

Malfunction due to initialization not yet completed.

The initialization causes the positioner to be calibrated to adapt it to the mounting situation. After initialization is completed, the positioner is ready for use.

➔ Initialize the positioner on first start-up.

➔ Re-initialize positioner after changing the mounting position.

➔ Initialize positioner after replacing or adding pneumatic or option modules.

Risk of positioner damage due to incorrect grounding of the electric welding equipment.

➔ Do not ground electric welding equipment near the positioner.

Incorrect cleaning will damage the window.

The window is made of Makrolon® and will be damaged when cleaned with abrasive cleaning agents or agents containing solvents.

➔ Do not rub the window dry.

➔ Do not use any cleaning agents containing chlorine or alcohol or abrasive cleaning agents.

➔ Use a non-abrasive, soft cloth for cleaning.

2 Markings on the device

2.1 Nameplate

The nameplates shown were up to date at the time of publication of this document. The nameplate on the device may differ from the one shown.

Explosion-protected version

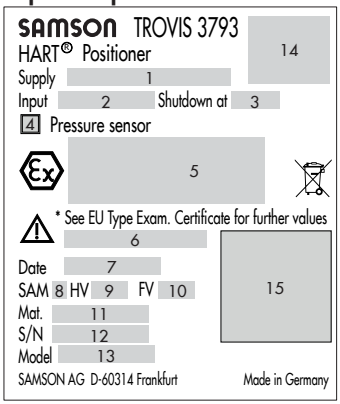

Version without explosion protection

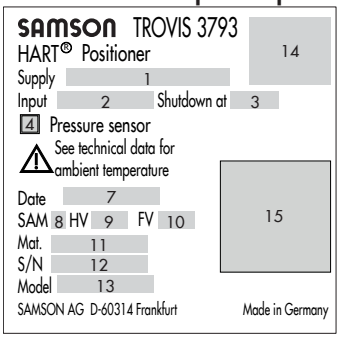

Pneumatic modules

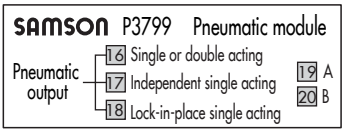

1 Supply pressure
2 Signal range
3 Emergency shutdown
4 Pressure sensor (yes/no)
5 Type of protection for explosion-protected devices
6 Temperature limits of test certificate for explosion-protected devices
7 Date of manufacture
8 Code for NAMUR Recommendation NE 53 (internal specification)
9 Hardware version
10 Software version
11 Material number
12 Serial number
13 Model number
14 Approvals (CE etc.)
15 DataMatrix code (electronic nameplate)
16 Single and double-acting pneumatic module (yes/no)
17 Independent, single-acting pneumatic module (yes/no)
18 Pneumatic module with fail-in-position function (yes/no)
19 Slot A occupied (yes/no)
20 Slot B occupied (yes/no)

2.1.1 Option modules

If option modules are installed into the positioner, a label to identify each module is affixed to the device.

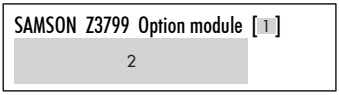

1 ID code of the option module
2 Function of the option module

2.1.2 Electronic module

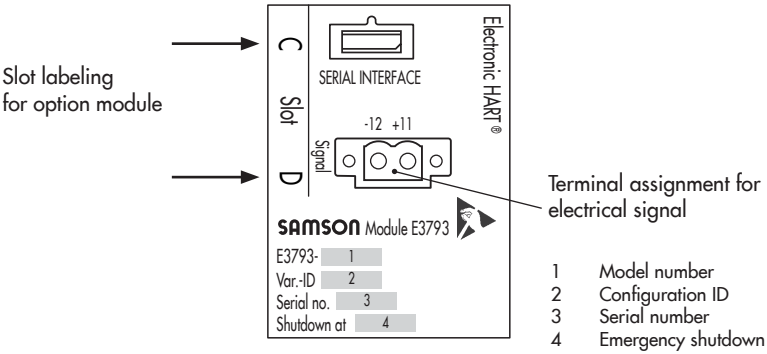

2.2 Hardware versions

Table 2-1: *Hardware revisions*

Old version	New version
GI.00 [1]	02.00.00 · Conversion from version GI.00 to version 02.00.00 not possible
	Pneumatic module for electric fail-in-place (single-acting)
	SIL for emergency venting
	Version with emergency shutdown at 4.4 mA
	Stainless steel version
	Additional option modules
	New pressure sensors (also for low temperature range)

[1] Released on 2017-04-01

2.3 Software versions

Table 2-2: *Software revisions*

Old version	New version
01.00.xx	01.01.16 · Update from version 01.00.xx to version 01.01.16 not possible
	Dead band test (static characteristic)
	French added as menu language
	Adaptation of piston zero
	Course of supply pressure
	Pressure limitation
	Extended diagnostics
	Valve signature: Start condition of reference graph and test with comparison feature
	Automatic setting of the software restriction
	Text adapted from SRT/SRT 100% to PST/FST
	Local password

2.4 Article code

Positioner	TROVIS 3793- x x x 0 x x x x x x x x 0 0 x x x x 0 x 0 0 x x x x
With LCD, autotune, HART® communication	
Explosion protection	
Without	0 0 0
ATEX II 2 G Ex ia IIC T4/T6 Gb II 2 D Ex ia IIIC T 85 °C Db	1 1 0
ATEX II 2 D Ex tb IIIC T 85 °C Db	5 1 0 1
ATEX II 3 G Ex nA IIC T4/T6 Gc II 2 D Ex tb IIIC T 85 °C Db	8 1 0 1
ATEX II 3 G Ex nA IIC T4/T6 Gc	8 5 0 1
IECEx Ex ia IIC T4/T6 Gb Ex ia IIIC T 85 °C Db	1 1 1
IECEx Ex tb IIIC T 85 °C Db	5 1 1 1
IECEx Ex nA IIC T4/T6 Gc Ex tb IIIC T 85 °C Db	8 1 1 1
IECEx Ex nA IIC T4/T6 Gc	8 5 1 1
INMETRO Ex ia IIC T4/T6 Gb Ex ia IIIC T 85°C Db	1 1 5
INMETRO Ex tb IIIC T85°C Db	5 1 5 1
INMETRO Ex ec IIC T4/T6 Gc Ex tb IIIC T85°C Db	8 1 5 1
INMETRO Ex ec IIC T4/T6 Gc	8 5 5 1
FM IS Class I, II, III, Division 1, Groups A, B, C, D, E, F, G; T6/T4 Ta Ex ia IIC T6/T4 Gb; Type 4X NI Class I, II, III, Division 2, Groups A, B, C, D, F, G; T6/T4 Ta Type 4X IS Class I, II, III, Division 1, Groups A, B, C, D, E, F, G; T6/T4 Ta IS Class I, Zone 1, AEx ia IIC T6/T4 Gb NI Class I, II, III, Division 2, Groups A, B, C, D, F, G; T6/T4 Ta; Type 4X Class I, Zone 1, AEx ia IIC; Type 4X	1 3 0
Pneumatics	
Single/double acting, K_V = 0.35	0 1
Single/double acting, K_V = 0.70	0 2
Single acting, 2x independent K_V = 0.35	0 3
Fail-in-place module, single acting K_V = 0.35	2 0 0 9 8

Positioner	TROVIS 3793- x x x 0 x x x x x x x x 0 0 x x x x 0 x 0 0 x x x x
Option module 1 (slot C)	
Without/dummy module	0 0
Software limit switches + binary output (NAMUR), [N]	1 0
Software limit switches + binary output (PLC), [X] [1)]	1 1
Position transmitter + binary input (24 V DC) + binary output (NAMUR), [T]	4 0
Binary input (floating contact) + binary input (24 V DC) + binary output (NAMUR), [U]	6 5 9 8
Forced venting function + binary input (24 V DC) + binary output (NAMUR), [V]	8 0
Analog input (4 to 20 mA) + binary output (NAMUR), [A]	9 0 9 8
Option module 2 (slot D)	
Without/dummy module	0 0
Software limit switches + binary output (NAMUR), [N]	1 0
Software limit switches + binary output (PLC), [X] [1)]	1 1
Inductive limit switches (NAMUR NC) + binary output (NAMUR), [P]; –50 to +85 °C	1 5
Inductive limit switches (NAMUR NC) + forced venting, [F]; –50 to +85 °C	2 1 9 8
Mechanical limit switches, [M]; –40 to +85 °C	3 0
Position transmitter + binary input (24 V DC) + binary output (NAMUR), [T]	4 0
External position sensor I (with sensor and 10 m connecting cable), [E]; –30 to +85 °C	5 0 9 8
External position sensor I (without sensor and connecting cable), [E]; –30 to +85 °C	5 1 9 8
External position sensor II (4 to 20 mA) + binary output (NAMUR), [Y]	6 0 9 8
Binary input (floating contact) + binary input (24 V DC) + binary output (NAMUR), [U]	6 5 9 8
Analog input (4 to 20 mA) + binary output (NAMUR), [A]	9 0 9 8
Pressure sensors	
Without	0
Standard (Supply 9, Output 138, Output 238)	1/2
Electrical connection	
M20x1.5 (1x cable gland, 3x blanking plugs)	1

Positioner	TROVIS 3793- x x x 0 x x x x x x x x 0 0 x x x 0 x 0 0 x x x x
Housing material	
Aluminum (standard)	0
Stainless steel 1.4408	1
Special applications	
Without	0
Additional certification	
Without	0
SIL	1 0/1 9 8
Permissible ambient temperature	
Standard: –20 to +85 °C, plastic cable gland	0
–40 to +85 °C metal cable gland	1
–55 to +85 °C, low-temperature version with metal cable gland	2
Emergency shutdown	
3.8 mA	0
4.4 mA	1 9 8
Display text in different languages	
Standard (English, German, French)	0
Special version	
Without	0
Cover without window	1
Hardware version	
02.00.00 [2]	2 9 8
GI.00 [3] [4]	0/1 9 9
Software version	
01.01.16	2 9 8 9 4
01.00.16 [4]	0/1 9 9 9 6

[1] The option module for *Software limit switches + Binary output (PLC), [X]* is not available in the explosion-protection version.

[2] The hardware version 02.00.00 is only compatible with software version 01.01.xx (downdating to version 01.00.xx is not possible).

[3] The hardware version GI.00 is only compatible with software version 01.00.xx (updating to version 01.01.16 is not possible).

[4] Information on TROVIS 3793 Positioner with hardware version GI.00 and software version 01.00.xx can be found in the corresponding Mounting and Operating Instructions ▶ EB 8493 for software version 01.00.xx

3 Design and principle of operation

➔ See Fig. 3-1

The TROVIS 3793 Electropneumatic Positioner is mounted on pneumatic control valves and used to assign the valve position (controlled variable x) to the control signal (set point w). The positioner compares the electric control signal of a control system to the travel or opening angle of the control valve and issues a signal pressure for the pneumatic actuator. The positioner mainly consists of a non-contact travel sensor system (2), pneumatics and the electronics with the microcontroller (4). The output of the standard version is either single or double acting; which means both the Output 138 and Output 238 can provide the output variable and route the signal pressure to the actuator.

The positioner can be configured to meet requirements of an application by adding a maximum of two pneumatic modules (A, B) and electronic option modules (C, D). The pneumatic modules mainly consist of a microcontroller, which operates an i/p converter with downstream spool valve. Depending on the actuator used, an output of the positioner can be sealed to achieve a single-acting function. The option modules additionally provide individual functions, e.g. recognition of the end positions (see Chapter 3.1.2).

The valve position is transmitted either as an angle of rotation or linear travel to the pick-up lever, from there to the travel sensor (2) and forwarded to the microcontroller (4).

The PID algorithm in the microcontroller compares the valve position measured by the travel sensor (2) to the 4 to 20 mA DC control signal issued by the control system after it has been converted by the A/D converter (3). In case of a set point deviation, the pneumatic module (A, B) causes the actuator (1) to be either vented or supplied with air. As a result, the closure member of the valve (e.g. plug) is moved to the position determined by the set point.

The pneumatic module is supplied with air. The flow rate of the module's output can be restricted by software.

The positioner is operated by a rotary push-button (9) for menu navigation on the plain-text display (8).

The extended EXPERTplus diagnostics are integrated into the positioner. They provide information on the control valve and positioner and generate diagnostic and status messages, which allow faults to be pinpointed quickly.

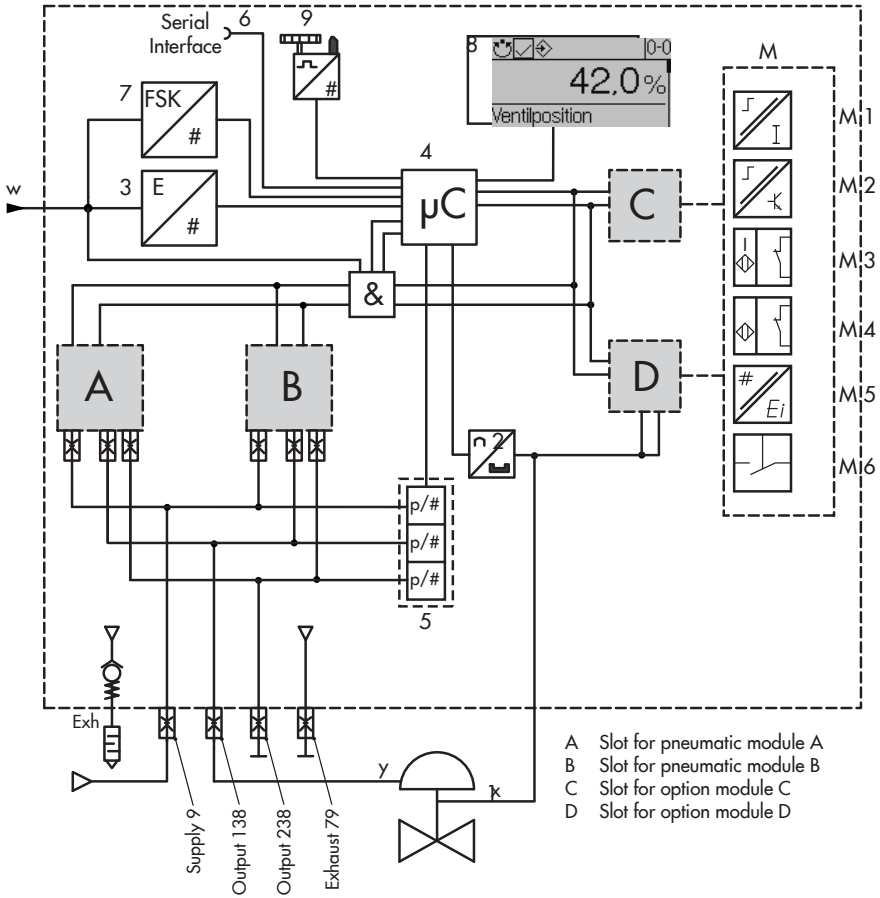

1 Control valve
2 Travel sensor
3 A/D converter
4 Microcontroller
5 Pressure sensors
6 Communication interface
7 HART® connection
8 Display
9 Rotary pushbutton

M Available option modules (see Chapter 3.1.2)
M.1 Software limit switches with binary output (NAMUR)
M.2 Software limit switches with binary output (PLC)
M.3 Inductive limit switches with binary output (NAMUR)
M.4 Mechanical limit switches
M.5 Position transmitter with binary input and output
M.6 Forced venting with binary input and output

Fig. 3-1: *Block diagram*

3.1 Optional modules

The modular design of the TROVIS 3793 Positioner allows it to be adapted to specific requirements:

– **Pneumatic modules** used to customize the air capacity, direction of action (single or double acting) and the fail-safe action upon power failure (see Table 3-3)

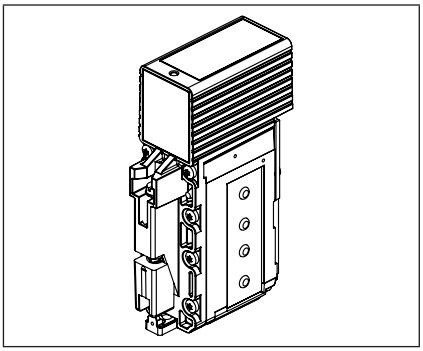

– **Option modules** to integrate additional functions

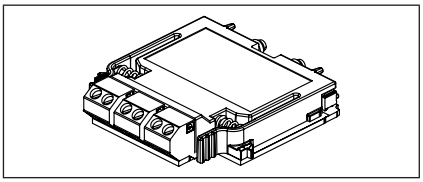

If the positioner is ordered with pneumatic modules and/or option modules, they are ready installed and connected upon delivery.

3.1.1 Pneumatic modules

The positioner can be fitted with a maximum of two pneumatic modules. The following applies:

➔ Combine pneumatic modules as listed in Table 3-4.

➔ Do not combine modules P3799-0001 and P3799-0003.

➔ Only combine module P3799-0004 with module P3799-0003.

Table 3-3: *Available pneumatic modules*

Article code	Pneumatic module function
P3799-0000 **SIL** [1]	**Dummy module:** it seals the slot connections and must be used when only one pneumatic module is installed.
P3799-0001 **SIL** [1]	**Output 138 and Output 238 modules:** Single and double acting In the event of a power failure, the valve moves to its fail-safe position
P3799-0002 **SIL** [1]	**Output 138 module:** Single-acting In the event of a power failure, the valve moves to its fail-safe position
P3799-0003 **SIL** [1]	**Output 238 module:** Single-acting In the event of a power failure, the valve moves to its fail-safe position
P3799-0004	**Output 138 module:** fail-in-place function: the valve remains in its last position upon power failure

[1] Approval according to IEC 61508/SIL

Table 3-4: *Permissible combinations of pneumatic modules*

Slot A	Slot B	Function	Air capacity	Fail-safe position	
				Output 138	Output 238
P3799-000**1**	P3799-000**0**	Single/double acting	K_{VS} 0.35	Exhaust	Supply
P3799-000**1**	P3799-000**1**	Single/double acting	K_{VS} 0.70	Exhaust	Supply
P3799-000**2**	P3799-000**3**	Single acting, 2x independent	K_{VS} 0.35	Exhaust	Exhaust
P3799-000**3**	P3799-000**4**	Single-acting, fail-in-place	K_{VS} 0.35	Hold position	–

Table 3-5: *Recommended use*

Actuator area of Type 3271/3277	Number of pneumatic modules
175 to 750 cm²	1x pneumatic module
1000 to 1400-60 cm²	2x pneumatic modules
1400-120 cm² or larger	1x pneumatic module plus 1x or more volume boosters

i ***Note***

We recommend the Type 3271 Actuator with 1400-120 cm² actuator area to use the ***large-signal/small-signal mode*** *(see the 'Installation' chapter).*

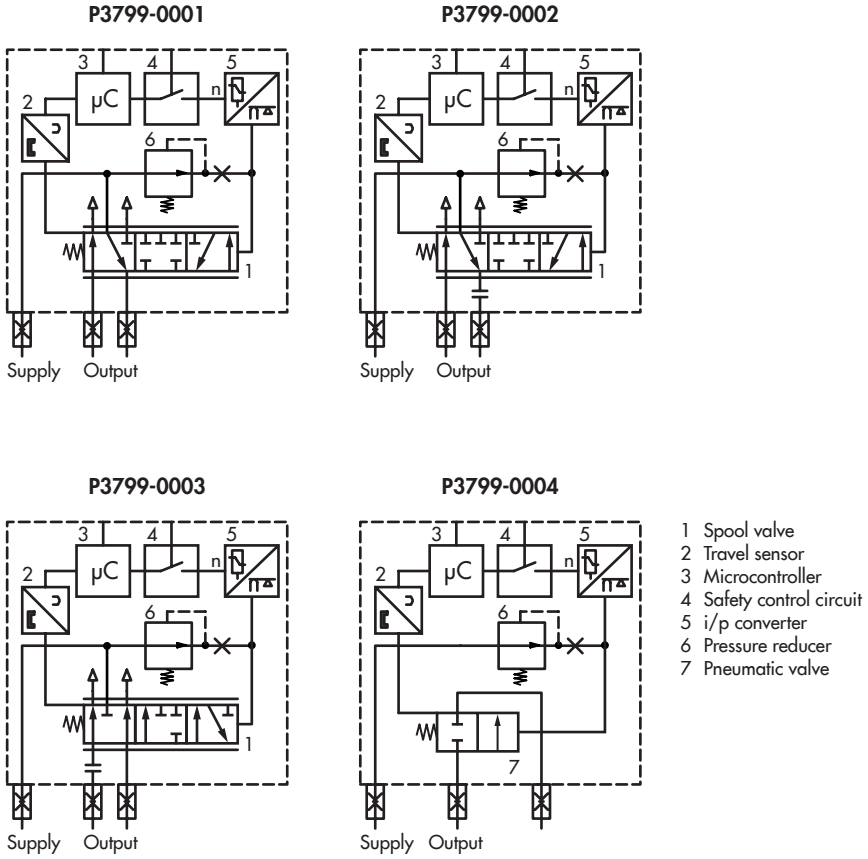

Fig. 3-2: *Design of pneumatic modules*

3.1.2 Option modules

The positioner can be fitted with a maximum of two option modules. The following applies:

➔ Do not use option modules with the identical ID code together in one positioner.

➔ Check the type of explosion protection of the option modules (see Table 3-6).

Option modules are available for the following additional functions. Table 3-7 lists all option modules.

Hardware limit switches

Limit contacts with mechanical position pick-up issue a signal to a control system when the valve reaches one of the two adjustable limits.

– **Inductive limit switches:** inductive proximity switches are operated by adjustable tags. For operation of the inductive limit switches, switching amplifiers must be connected in the output circuit.

– **Mechanical limit switches:** microswitches are operated by rollers with adjustable switching point.

Software limit switches:

The software limit switches signalize that the valve has reached one of the two adjustable limits.

– When limit 1 is not reached
– When limit 2 is exceeded

Two versions are available:

– Connection of a PLC according to IEC 61131-2, P_{max} = 400 mW
– Connection to NAMUR switching amplifier acc. to EN 60947-5-6

Analog position transmitter

The position transmitter is a two-wire transmitter and issues the travel sensor signal as a 4 to 20 mA signal processed by the microcontroller. Additionally, the position transmitter allows positioner faults to be indicated over a signal current of <2.4 mA or >21.6 mA.

Forced venting

If the voltage falls below 11 V at the terminals of the option module, the pneumatic outputs of the positioner are either vented or supplied with air depending on the combination of the pneumatic modules. This occurs regardless of the set point. A voltage above 15 V keeps the forced venting function inactive.

Binary output

A fault alarm output signalizes a fault to the control station. The following versions are available:

– Connection of a PLC according to IEC 61131-2, P_{max} = 400 mW
– Connection to NAMUR switching amplifier acc. to EN 60947-5-6

The binary output can be configured either as a fault alarm output or as a software limit switch.

Binary input

The binary inputs can be floating (binary input contact) or non-floating (binary input 0 to 24 V) and can be configured to provide the following functions:

– **Switching state:** the switching state of the binary input is indicated and logged in

the corresponding parameter. This function can be used for example during start-up to test the functioning of the binary input.

- **On-site write protection:** after the first initialization, a local write protection can be activated. While the binary input is active, no settings can be changed at the positioner. The positioner cannot be re-initialized.
- **PST/FST:** test to check the valve's ability to move and assess its dynamic control response (PST: partial stroke test/FST: full stroke test).
  - **Start PST:** perform a partial stroke test within an adjustable range. Information on configuration and execution of the partial stroke test can be found in Operating Instructions ▶ EB 8389-2.
  - **Start FST:** perform a full stroke test over the entire travel range following configurable parameters. Information on configuration and execution of the full stroke test can be found in Operating Instructions ▶ EB 8389-2.
- **Move valve to fixed value:** move the valve to a defined position entered in the 'Fixed value over binary input' parameter. See parameter list in Appendix A (configuration instructions).

Analog input

The analog input accepts a 4 to 20 mA signal from pressure or temperature transmitters of external equipment with their own power supply.

External position sensor I

The external position sensor I allows the positioner to be mounted away from the valve (e.g. on a wall). Only the sensor (SAMSON) is mounted to the control valve. The connection of x and y signals to the actuator is established by cable and piping for air.

External position sensor II

Commercially available linear or angle position sensors that use a 4 to 20 mA signal can be used for the external position sensor II. The 4 to 20 mA signal corresponds to the valve travel. In this case, the sensor must be powered externally. The positioner switches to open-loop operation (no closed-loop operation) as soon as the input signal falls below 2.5 mA.

Table 3-7: *Available option modules for the TROVIS 3793 Positioner*

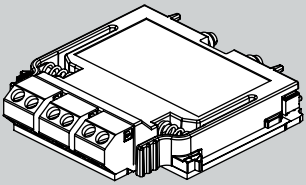

Option module

Article code	Identification	Software limit switches (NAMUR)	Software limit switches (PLC)	Inductive limit switches	Mechanical limit switches	Analog position transmitter	External position sensor I	External position sensor II (4 to 20 mA)	Binary input (contact)	Binary input (24 V)	Forced venting	Binary output	Analog input (4 to 20 mA)	Description
Z3799-00000	Dummy module													Install and connect option modules (see the 'Installation' chapter)
Z3799-xxx10	[N]	•										•		
Z3799-xxx11	[X]		•									•		
Z3799-xxx15 [1)]	[P]			•								•		
Z3799-xxx21 [1)]	[F]			•							•			
Z3799-xxx30 [1)]	[M]				•									
Z3799-xxx40	[T]					•				•				
Z3799-xxx50	[E]						•							
Z3799-xxx60	[Y]							•				•		
Z3799-xxx65	[U]								•	•				
Z3799-xxx80	[V]									•	•	•		
Z3799-xxx90	[A]											•	•	

1) Consisting of an option module and a mechanical assembly unit

Table 3-6: *Article code of option modules*

Option module	Z3799-	x	x	x	x	x
Explosion protection						
Without		0	0	0		
Ex ia		1	1	0		
Ex t		5	1	0		
Ex t/Ex nA or Ex ec		8	1	0		
Ex nA or Ex ec		8	5	0		

3.2 Mounting versions

The TROVIS 3793 Positioner is suitable for the following types of attachment using the corresponding accessories:

– **Direct attachment to Type 3277 Actuator:**
  The positioner is mounted on the yoke. The signal pressure is connected to the actuator over a connection block: internally over a hole in the valve yoke for "actuator stem extends" fail-safe action and through an external signal pressure line for "actuator stem retracts" fail-safe action.
– **Attachment to actuators according to IEC 60534-6:**
  The positioner is mounted to the control valve using a NAMUR bracket.
– **Attachment to rotary actuators according to VDI/VDE 3845:**
  The positioner is mounted to the rotary actuator using the corresponding accessories.
– **Attachment according to VDI/VDE 3847:**
  Attachment according to VDI/VDE 3847 using the corresponding accessories allows the positioner to be replaced quickly while the process is running.

3.3 Configuration using the TROVIS-VIEW software

The positioner can be configured with SAMSON's TROVIS-VIEW Software (version 4). For this purpose, the positioner has a digital interface (**SAMSON SERIAL INTERFACE**, **SSP**) to allow the USB port of a computer to be connected to it using an adapter cable.

The TROVIS-VIEW software enables the user to easily configure the positioner as well as view process parameters online.

i Note

TROVIS-VIEW can be downloaded free of charge from our website at
▶ *www.samsongroup.com > Downloads > Software & Drivers > TROVIS-VIEW.*

3.4 Technical data

Table 3-8: *TROVIS 3793 Electropneumatic Positioner*

Travel		
Adjustable travel for	Direct attachment to Type 3277: Attachment according to IEC 60534-6 (NAMUR): Attachment according to VDI/VDE 3847-1 Attachment according to VDI/VDE 3845 and VDI/VDE 3847-2:	3.6 to 30 mm 5 to 300 mm 5 to 300 mm 24 to 100° (170° [1])
Set point w		
Signal range	4 to 20 mA Two-wire device, reverse polarity protection, split-range operation (can be configured as required, minimum span 4 mA)	
Static destruction limit	40 V, internal current limit approx. 40 mA	
Minimum current	3.75 mA for display/operation (HART® communication and configuration) 3.90 mA for pneumatic function	
Load impedance	≤ 9.9 V (corresponds to 495 Ω at 20 mA)	
Supply		
Supply air	2.5 to 10 bar/30 to 150 psi	
Air quality acc. to ISO 8573-1	Max. particle size and density: Oil content: Pressure dew point:	Class 4 Class 3 Class 3 or at least 10 K below the lowest ambient temperature to be expected
Signal pressure (output)	0 bar up to supply pressure	
Hysteresis	≤0.3 %	
Sensitivity	≤0.1 %, adjustable by software	
Start-up time	After interrupted operation < 300 ms: 100 ms After interrupted operation > 300 ms: ≤2 s	
Transit time	Up to 10000 s separately adjustable for exhaust and supply by software	
Direction of action	Reversible	
Air consumption [2]	≤300 l_n/h or 0.3 m³/h with 6 bar supply pressure, depending on module	
Air output capacity (when Δp = 6 bar)		
Actuator (supply)	32 m_n^3/h with one pneumatic module ($K_{V\ max\ (20\ °C)}$ = 0.34)	
	60 m_n^3/h with two pneumatic modules of the same sort ($K_{V\ max\ (20\ °C)}$ = 0.64)	
Actuator (exhaust)	37 m_n^3/h with one pneumatic module ($K_{V\ max\ (20\ °C)}$ = 0.40)	
	70 m_n^3/h with two pneumatic modules of the same sort ($K_{V\ max\ (20\ °C)}$ = 0.75)	

Environmental conditions and permissible temperatures	
Permissible environmental conditions according to EN 60721-3	
Storage	1K6 (relative humidity ≤95 %)
Transport	2K4
Operation	4K4 –20 to +85 °C: All versions –40 to +85 °C: With metal cable glands –55 to +85 °C: Low-temperature versions with metal cable glands Observe the limits in the test certificate for explosion-protected versions.
Resistance to vibration	
Vibrations (sinusoidal)	According to DIN EN 60068-2-6: 0.15 mm, 10 to 60 Hz; 20 m/s², 60 to 500 Hz per axis 0.75 mm, 10 to 60 Hz; 100 m/s², 60 to 500 Hz per axis
Bumps (half sine)	According to DIN EN 60068-2-29: 150 m/s², 6 ms; 4000 bumps per axis
Noise	According to DIN EN 60068-2-64: 10 to 200 Hz: 1 (m/s²)²/Hz 200 to 500 Hz: 0.3 (m/s²)²/Hz 4 h/axis
Recommended continuous duty	≤20 m/s²
Influences	
Temperature	≤0.15 %/10 K
Supply	None
Requirements	
EMC	Complying with EN 61000-6-2, EN 61000-6-3, EN 61326-1 and NAMUR Recommendation NE 21
Degree of protection	IP66 and NEMA 4X
Certification according to IEC 61508/SIL	Suitable for use in safety-instrumented systems according to IEC 61511 up to SIL 2 (single device/HFT = 0) and SIL 3 (redundant configuration/ HFT = 1) • Triggered by the set point, emergency venting depending on positioner version at ≤3.8 mA or ≤4.4 mA • By the optional 'Forced venting' additional function, emergency venting at <11 V
Conformity	**CE**

Electrical connections		
Cable glands	Max. four, M20x1.5	
Terminals	Screw terminals for 0.2 to 2.5 mm² wire cross-section (max. 1.5 mm² with the option modules)	
Explosion protection		
	See Table 3-9	
Materials		
Housing and cover	Aluminum version:	Die-cast aluminum EN AC-AlSi12(Fe) (EN AC-44300) acc. to DIN 1706, chromate and powder coating
	Stainless steel version:	1.4408
Window	Makrolon® 2807	
Cable glands	Polyamide, nickel-plated brass, stainless steel 1.4305	
Other external parts	Stainless steel 1.4571 and 1.4404 (316 L)	
Communication		
	TROVIS VIEW with SSP/HART® Revision 7	
Weight		
	Aluminum: 1.4 to 1.6 kg (depending on version) Stainless steel: 3.2 to 3.4 kg (depending on version)	

1) On request
2) Based on temperature range –40 to +85 °C

Table 3-9: *Optional additional functions*

Analog position transmitter	
Version	Two-wire system, galvanic isolation, reverse polarity protection, reversible direction of action
Supply	10 to 30 V DC
Output signal	4 to 20 mA
Error indication	2.4 or 21.6 mA (action differs from the specification in NAMUR Recommendation NE 43)
No-load current	1.4 mA
Static destruction limit	38 V DC · 30 V AC

Software limit switches		**NAMUR**	**PLC**
Version		Galvanic isolation, reverse polarity protection, switching output acc. to EN 60947-5-6	Galvanic isolation, reverse polarity protection, binary input of a PLC acc. to EN 61131-2, P_{max} = 400 mW
Signal state	Non-conducting	≤1.0 mA	Blocked
	Conductive	≥2.2 mA	Conductive (R = 348 Ω)
Static destruction limit		32 V DC/24 V AC	32 V DC/50 mA
Binary output		**NAMUR**	**PLC**
Version		Galvanic isolation, reverse polarity protection, switching output acc. to EN 60947-5-6	Galvanic isolation, reverse polarity protection, binary input of a PLC acc. to EN 61131-2, P_{max} = 400 mW
Signal state	Non-conducting	≤1.0 mA	Blocked
	Conductive	≥2.2 mA	Conductive (R = 348 Ω)
Static destruction limit		32 V DC/24 V AC	32 V DC/50 mA
Binary input (24 V)			
Version		Galvanic isolation, reverse polarity protection	
Voltage input		0 to 24 V DC	
Input resistance		≥7 kΩ	
ON switching state		Ue >18 V	
OFF switching state		Ue <11 V	
Static destruction limit		38 V DC/30 V AC	
Binary input (contact)			
Version		For external switch (floating contact) or relay contact Galvanic isolation	
Open-circuit voltage		Max. 10 V (when contact is open)	
Current draw		Max. 100 mA (pulsed when contact is closed)	
Contact		Closed: R <5 Ω; open: R >300 Ω	
Static destruction limit		38 V DC	
Analog input			
Input		4 to 20 mA, galvanic isolation, reverse polarity protection	
Load		<4.3 V	
Current limit		33 mA	

Forced venting · Approval acc. to IEC 61508/SIL		
Version		Galvanic isolation, reverse polarity protection
Voltage input		0 to 24 V DC
Input current		At V_{in} = 24 V: approx. 7 mA In the switching point (at approx. 13 V): approx. 3.3 mA
Signal state	Active	Ue <11 V
	Not active	Ue >18 V
Static destruction limit		38 V DC/30 V AC
Inductive limit switches		
Version		For connection to switching amplifier according to EN 60947-5-6, SJ2-SN proximity switches (NC contact, Pepperl + Fuchs 70133004), reverse polarity protection
Measuring plate not detected		≥3 mA
Measuring plate detected		≤1 mA
Static destruction limit		20 V DC
Permissible ambient temperature		–50 to +85 °C
Mechanical limit switches		
Floating contact		NC contact/NO contact
Static destruction limit		38 V DC · 30 V AC · 0.2 A
Permissible ambient temperature		–40 to +85 °C
External position sensor I		
Version		For connection to an external position sensor (SAMSON)
Permissible ambient temperature		T4: –30 to +80 °C
		T6: –30 to +55 °C
		T 85 °C: –30 to +55 °C
External position sensor II (4 to 20 mA)		
Input		4 to 20 mA, galvanic isolation, reverse polarity protection
Load		<4.3 V
Current limit		33 mA

Table 3-10: *Pressure sensors*

Pressure sensors	
Pressure range	0 to 10 bar

Table 3-11: *Summary of explosion protection approvals*

TROVIS 3793	Certification			Type of protection
-110	ATEX	Number Date	BVS 16 ATEX E 117 2016-12-01	II 2G Ex ia IIC T4/T6 Gb II 2D Ex ia IIIC T85 °C Db
-510	ATEX	Number Date	BVS 16 ATEX E 117 2016-12-01	I 2D Ex tb IIIC T85°C Db
-810	ATEX	Number Date	BVS 16 ATEX E 117 2016-12-01	II 3G Ex nA IIC T4/T6 Gc II 2D Ex tb IIIC T85°C Db
-850	ATEX	Number Date	BVS 16 ATEX E 123 2016-12-01	II 3G Ex nA IIC T4/T6 Gc
-111	IECEx	Number Date	IECEx BVS 16.0084 2016-12-07	Ex ia IIC T4/T6 Gb Ex ia IIIC T85°C Db
-511	IECEx	Number Date	IECEx BVS 16.0084 2016-12-07	Ex tb IIIC T85°C Db
-811	IECEx	Number Date	IECEx BVS 16.0084 2016-12-07	Ex nA IIC T4/T6 Gc Ex tb IIIC T85°C Db
-851	IECEx	Number Date	IECEx BVS 16.0084 2016-12-07	Ex nA IIC T4/T6 Gc
-130	FM	Number Date	FM16CA0218 2022-10-18	IS Class I, II, III, Division 1, Groups A, B, C, D, E, F, G; T6/T4 Ta Ex ia IIC T6/T4 Gb Type 4X NI Class I, II, III, Division 2, Groups A, B, C, D, F, G; T6/T4 Ta Type 4X
-130	FM	Number Date	FM16US0471 2018-10-18	IS Class I, II, III, Division 1, Groups A, B, C, D, E, F, G; T6/T4 Ta* IS Class I, Zone 1, AEx ia IIC T* Gb NI Class I, II, III, Division 2, Groups A, B, C, D, F, G; T6/T4 Ta* Type 4X Class I, Zone 1, AEx ia IIC; Type 4X
-115	INMETRO	Number Date Valid until	IEx 22.0063X 2023-01-04 2028-11-21	Ex ia IIC T4/T6 Gb Ex ia IIIC T 85°C Db
-515	INMETRO	Number Date Valid until	IEx 22.0063X 2023-01-04 2028-11-21	Ex tb IIIC T85°C Db
-815	INMETRO	Number Date Valid until	IEx 22.0063X 2023-01-04 2028-11-21	Ex ec IIC T4/T6 Gc Ex tb IIIC T85°C Db
-855	INMETRO	Number Date Valid until	IEx 22.0063X 2023-01-04 2028-11-21	Ex ec IIC T4/T6 Gc

3.5 Dimensions in mm

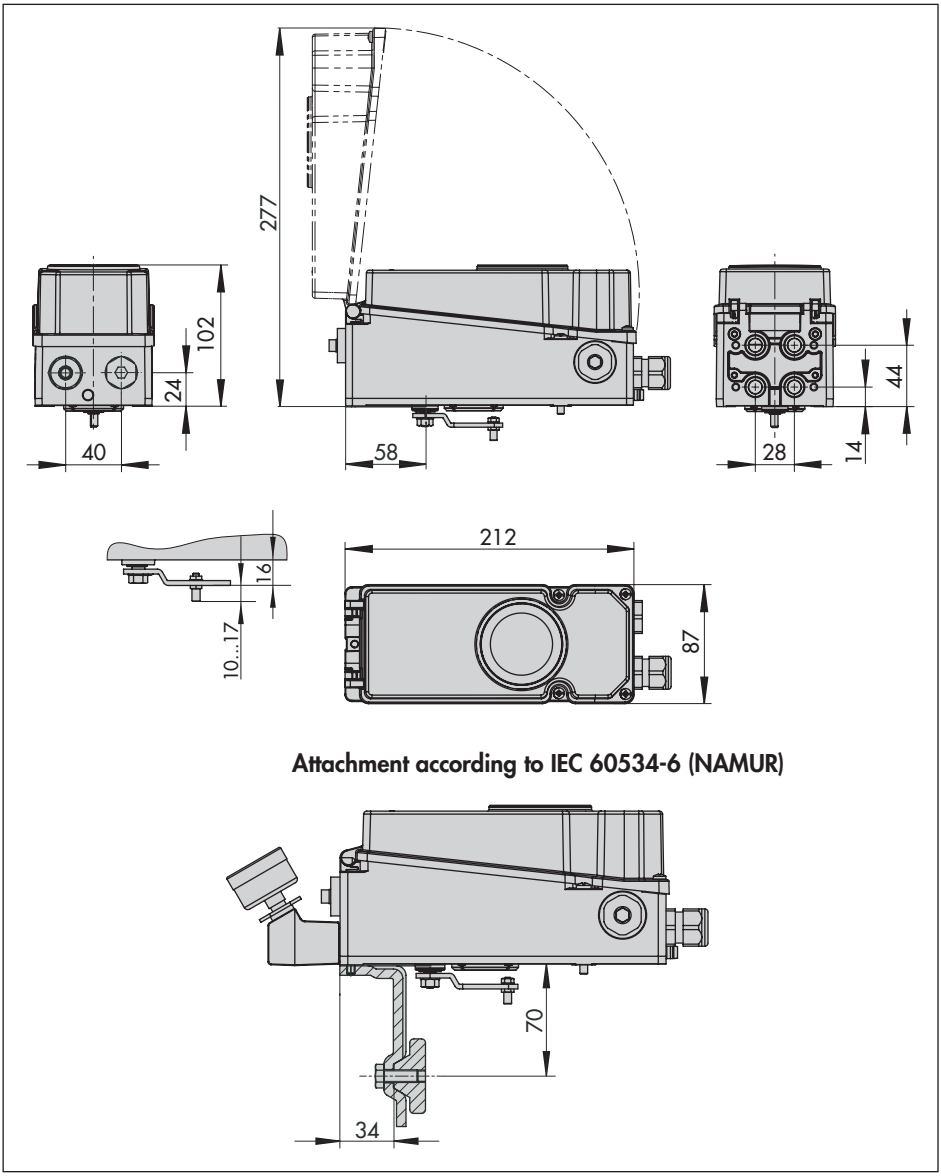

Pressure gauge bracket, two pressure gauges

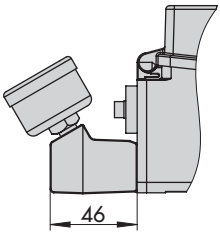

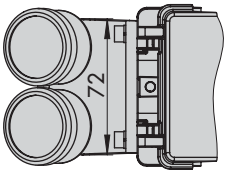

Pressure gauge bracket, three pressure gauges

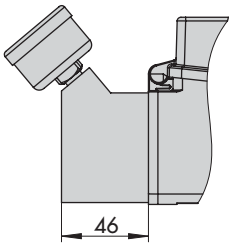

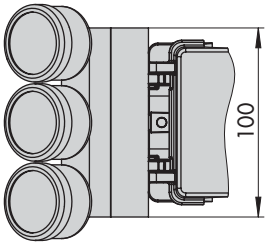

Connecting plate

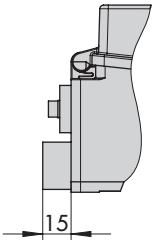

Attachment according to VDI/ VDE 3847-1 onto Type 3277 Actuator

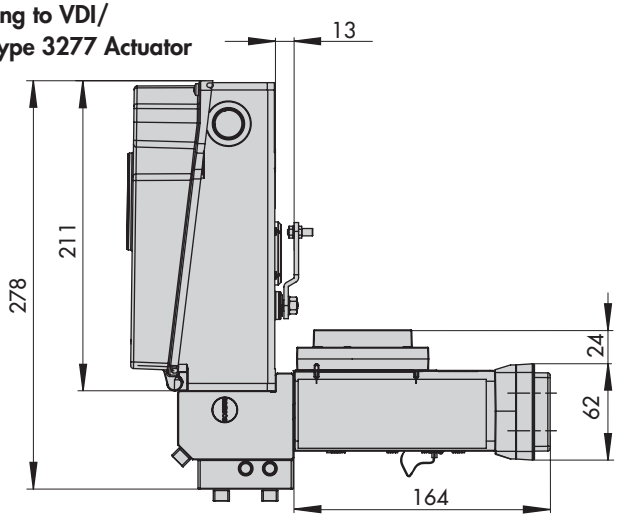

Attachment according to VDI/ VDE 3847-1 to a NAMUR rib

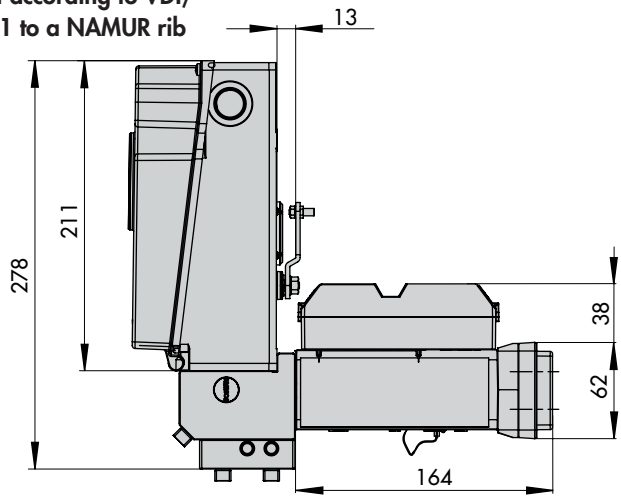

Attachment to rotary actuators according to VDI/VDE 3847-2

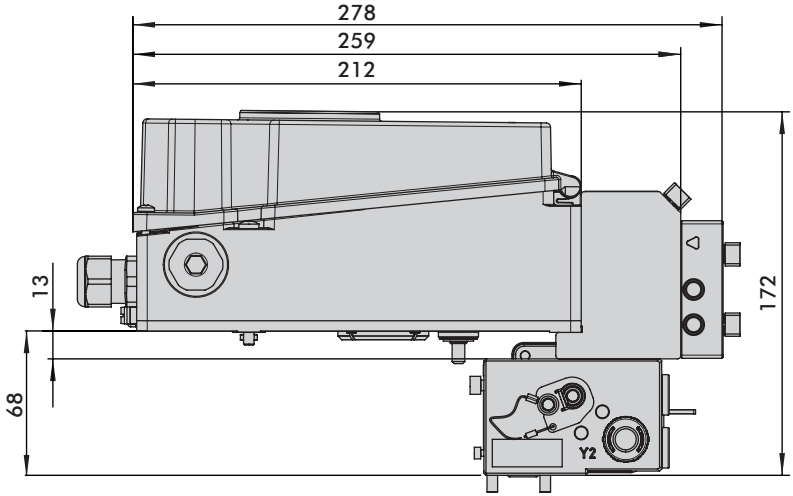

Attachment to rotary actuators according to VDI/VDE 3845
Fixing level 1, AA1 to AA4 size, see the 'Installation' chapter

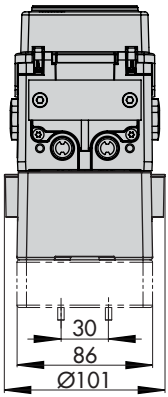

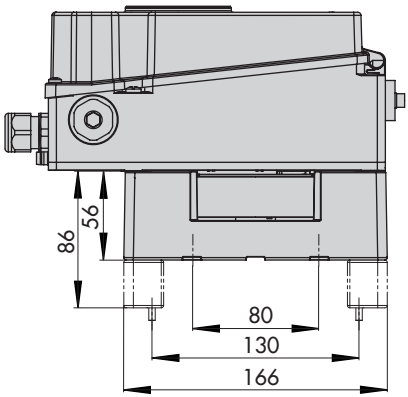

Lever

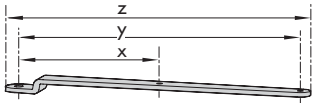

Lever	x	y	z
M	25 mm	50 mm	66 mm
L	70 mm	100 mm	116 mm
XL	100 mm	200 mm	216 mm
XXL	200 mm	300 mm	316 mm

3.6 Fixing levels according to VDI/VDE 3845 (September 2010)

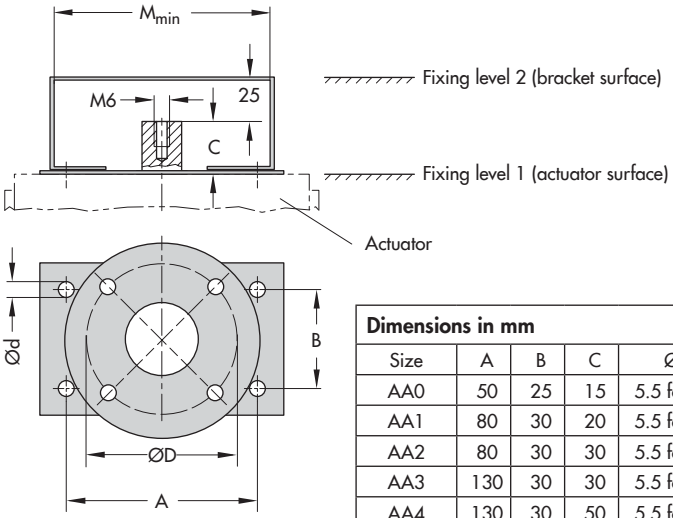

Dimensions in mm						
Size	A	B	C	Ød	M_{min}	D[1)]
AA0	50	25	15	5.5 for M5	66	50
AA1	80	30	20	5.5 for M5	96	50
AA2	80	30	30	5.5 for M5	96	50
AA3	130	30	30	5.5 for M5	146	50
AA4	130	30	50	5.5 for M5	146	50
AA5	200	50	80	6.5 for M6	220	50

1) Flange type F05 acc. to DIN EN ISO 5211

4 Shipment and on-site transport

The work described in this chapter is only to be performed by personnel appropriately qualified to carry out such tasks.

4.1 Accepting the delivered goods

After receiving the shipment, proceed as follows:

1. Check the scope of delivery. Check that the specifications on the nameplate of the positioner match the specifications in the delivery note. See the 'Markings on the device' chapter for nameplate details.
2. Check the shipment for transportation damage. Report any damage to SAMSON and the forwarding agent (refer to delivery note).

4.2 Removing the packaging from the positioner and modules

Observe the following sequence:

➔ Do not remove the packaging until immediately before installing the positioner, pneumatic and option modules.

➔ Dispose and recycle the packaging in accordance with the local regulations.

4.3 Transporting the packaging from the positioner and modules

➔ Pack the positioner and modules properly to comply with terms of transportation.

Transport instructions

– Protect the positioner and modules against external influences (e.g. impact).
– Protect the positioner and modules against moisture and dirt.
– Observe transport temperature depending on the permissible ambient temperature (see the 'Design and principle of operation' chapter).

4.4 Storing the positioner and modules

NOTICE

Risk of damage to the positioner and modules due to improper storage.

➔ *Observe the storage instructions.*
➔ *Avoid long storage times.*
➔ *Contact SAMSON in case of different storage conditions.*

Note

We recommend regularly checking the prevailing storage conditions during long storage periods.

Storage instructions

- Protect the positioner and modules against external influences (e.g. impact).
- Protect the positioner and modules against moisture and dirt. Store them at a relative humidity of less than 75 %. In damp spaces, prevent condensation. If necessary, use a drying agent or heating.
- Make sure that the ambient air is free of acids or other corrosive media.
- Observe transport temperature depending on the permissible ambient temperature (see the 'Design and principle of operation' chapter).
- Do not place any objects on the positioner or modules.

5 Installation

The work described in this chapter is to be performed only by personnel appropriately qualified to carry out such tasks.

⚠ DANGER

Risk of fatal injury due to the ignition of an explosive atmosphere.

➔ *Observe EN 60079-14 (VDE 0165, Part 1) for work on the positioner in potentially explosive atmospheres.*

➔ *Work in potentially explosive atmospheres is to be performed only by personnel who has undergone special training or instructions or who is authorized to work on explosion-protected devices in hazardous areas.*

⚠ DANGER

Risk of bursting in the pneumatic actuator due to the use of a fail-in-place module.

Before working on the positioner, actuator or any other valve accessories:

➔ *Depressurize all plant sections concerned and the actuator. Release any stored energy.*

⚠ WARNING

Crush hazard arising from actuator and plug stem moving.

➔ *Do not insert hands or finger into the yoke while the air supply is connected to the positioner.*

➔ *Before working on the positioner, disconnect and lock the pneumatic air supply.*

➔ *Do not impede the movement of the actuator and plug stem by inserting objects into the yoke.*

5.1 Installation conditions

Work position

The work position for the positioner is the front view onto the operating controls on the positioner seen from the position of operating personnel.

Operators must ensure that, after installation of the positioner, the operating personnel can perform all necessary work safely and easily access the device from the work position.

Mounting orientation

➔ See Fig. 5-1 for permissible mounting position.

➔ Do not seal or restrict the vent opening (see Fig. 5-2) when the device is installed on site.

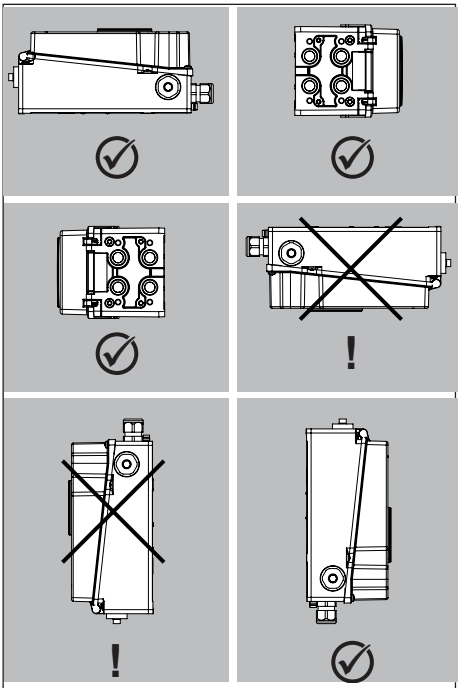

Fig. 5-1: *Permissible mounting positions*

5.2 Preparation for installation

Before installation, make sure that the following conditions are met:

– The positioner is not damaged.

Proceed as follows:

➔ Lay out the necessary material and tools to have them ready during mounting.

➔ Adjust correct lever and pin position (see Chapter 5.2.1).

➔ Remove the protective caps from the pneumatic connections.

➔ Install the pneumatic modules, option modules and/or dummy modules (see Chapter 5.2.2 and Chapter 5.2.3).

5.2.1 Adjusting the lever and pin position

The positioner is adapted to the actuator and to the rated travel by the lever on the back of the positioner and the pin inserted into the lever.

The travel tables on page 5-4 show the maximum adjustment range at the positioner. The travel that can be implemented at the valve is additionally restricted by the selected fail-safe position and the required compression of the actuator springs.

The positioner is equipped with the M lever (pin position 50) as standard (see Fig. 5-3).

If a pin position other than position **50** with the standard **M** lever is required or an **L** or **XL** lever size is required, proceed as follows (see Fig. 5-4):

1. Remove the follower pin (2) from its pin position and move it to the hole for the recommended pin position (according to travel tables on page 5-4) and screw tight. Only use the longer follower pin included in the mounting kit.
2. Place the lever (1) on the shaft of the positioner and fasten it tight using the disk spring (1.2) and nut (1.1). Use a tightening torque of 7.0 ± 1.0 Nm.

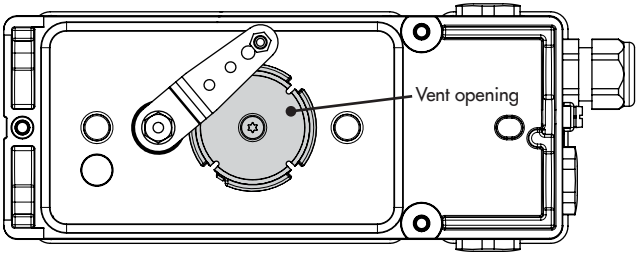

Fig. 5-2: *Vent opening (back of the positioner)*

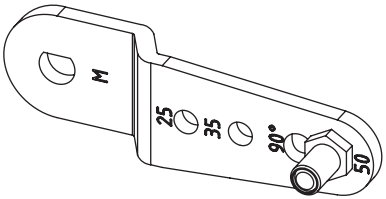

Fig. 5-3: *M lever with pin position 50*

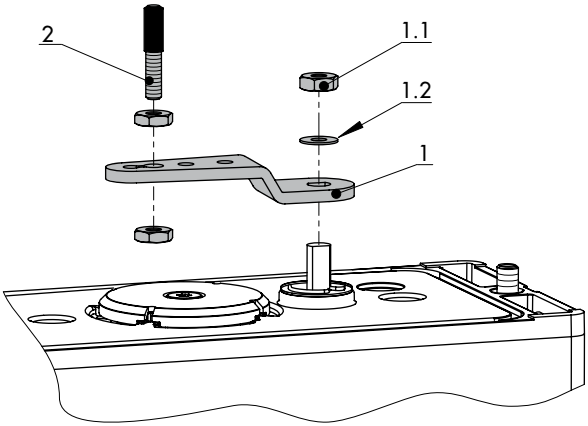

1	Lever
1.1	Nut
1.2	Disk spring
2	Follower pin

Fig. 5-4: *Mounting the lever and follower pin*

Travel tables

i Note

*The **M** lever is included in the scope of delivery.*
***L, XL, XXL** levers for attachment according to IEC 60534-6 (NAMUR) are available as accessories.*

Table 5-1: *Travel table for direct attachment to Type 3277 Actuator*

Actuator size [cm²]	**Rated travel** [mm]	**Adjustment range at positioner** Travel [mm]	**Required lever**	**Assigned pin position**
240/350	15	7.0 to 35.0	M	35
355/700/750	30	10.0 to 50.0	M	50

Table 5-2: *Travel table for attachment according to IEC 60534-6 (NAMUR)*

SAMSON valves with Type 3271 Actuator		**Adjustment range at positioner Other control valves**			
Actuator size [cm²]	**Rated travel** [mm]	**Min. travel** [mm]	**Max. travel** [mm]	**Required lever**	**Assigned pin position**
240/350/355/ 700/750	7.5 and 15	7.0	35.0	M	35
355/700/750	30	10.0	50.0	M	50
1000/1400/2800	30	14.0	70.0	L	70
	60	20.0	100.0	L	100
1400/2800	120	40.0	200.0	XL	200
1400	250	60.0	300.0	XXL	300

Table 5-3: *Travel table for attachment to rotary actuators*

Opening angle	**Required lever**	**Assigned pin position**
24 to 100°	M	90°

Lever

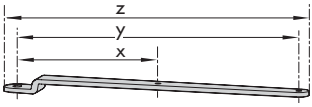

Lever	x	y	z
M	25 mm	50 mm	66 mm
L	70 mm	100 mm	116 mm
XL	100 mm	200 mm	216 mm
XXL	200 mm	300 mm	316 mm

5.2.2 Installing and removing pneumatic modules

➔ Before installing or removing pneumatic modules, make sure that:

- The air is not yet connected to the positioner or the air supply is disconnected while the modules are being removed or installed.
- The power is not yet connected to the positioner or the positioner is not powered while the modules are being removed or installed.

Two slots are available for the pneumatic modules in the positioner (see Fig. 5-6).

Either two pneumatic modules must be installed or one pneumatic module together with a dummy module must be installed. A slot without an installed module is not permissible.

Removing the pneumatic/dummy module

1. Unscrew the fastening screw using a flat-blade screwdriver (15 turns of the screw).
2. Push the module towards the display and carefully pull it out.
3. Store the module in its packaging.

Installing the pneumatic/dummy module

1. Observe permissible combinations of pneumatic modules specified in Fig. 5-6.
2. Check that the seal on the module is properly seated (see Fig. 5-8): The seal must not protrude out of the groove.
3. Turn the screw to push the wedge downward as far as it will go (see Fig. 5-7).
4. Install the module as shown in Fig. 5-5. Press the module toward the display and insert it along the wedge.
5. Lightly push the module downward, while tightening the fastening screw using a suitable flat-blade screwdriver. Tighten it with a torque of 0.7 ± 0.1 Nm.

If the changes have been made to the pneumatic modules, the positioner must re-initialized (see the 'Start-up' chapter).

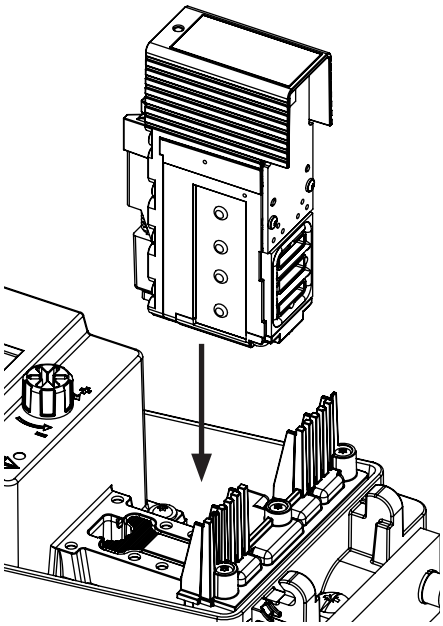

Fig. 5-5: *Installing or replacing the pneumatic module*

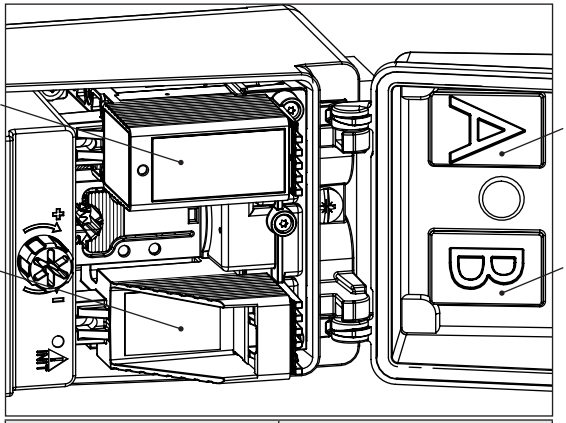

Slot A	Slot B
P3799-000**1**	P3799-000**0**
P3799-000**1**	P3799-000**1**
P3799-000**2**	P3799-000**3**
P3799-000**3**	P3799-000**4**

Fig. 5-6: *Pneumatic module slots*

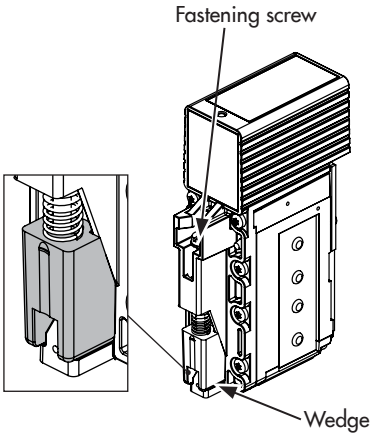

Fig. 5-7: *Wedge for fastening*

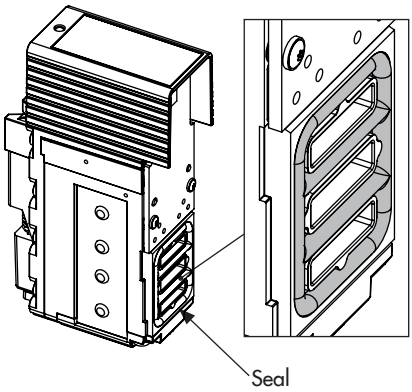

Fig. 5-8: *Seal of the pneumatic module*

5.2.3 Installing and removing option modules

NOTICE

Electrostatic discharge will damage the option modules.

➔ *Observe the ESD requirements according to IEC 61340-5-1.*

➔ *Only store option modules in their original packaging.*

➔ Before installing or removing option modules, make sure that:

- The air is not yet connected to the positioner or the air supply is disconnected while the modules are being removed or installed.
- The power is not yet connected to the positioner or the positioner is not powered while the modules are being removed or installed.
- The explosion protection certificate of the option modules used is the same as that of the positioner (see the 'Design and principle of operation' chapter).

Two slots are available for the option modules in the positioner (see Fig. 5-10).

A dummy module is inserted into slot D to protect the slots' contacts upon delivery of the positioner without option modules. Depending on which slot remains free, the dummy module must be adapted to the slot by breaking off the corresponding edges. Break off the edges with a pair of pliers at the predetermined breaking points.

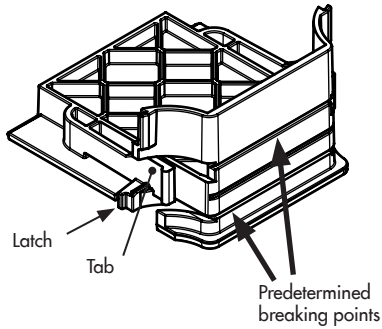

Dummy module in the delivered state

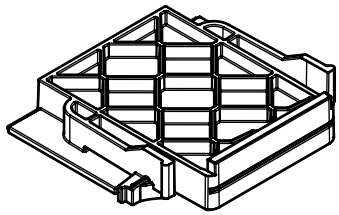

Dummy module adapted for installation in slot C (top and bottom edges snapped off)

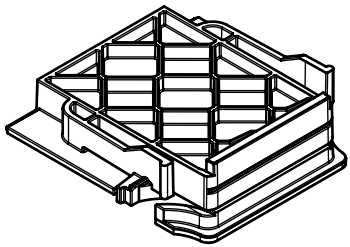

Dummy module adapted for installation in slot D (top edge snapped off)

Fig. 5-9: *Dummy module*

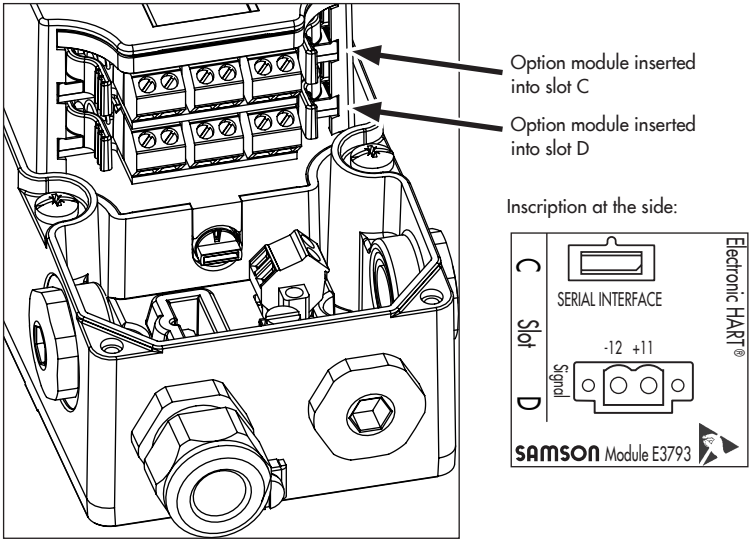

Fig. 5-10: *Slots for option modules*

When option modules are used, either two option modules or an option module and a dummy module must be installed. A slot without an installed module is not permissible.

Removing the dummy module

1. Take hold of the dummy module at the tabs.
2. Press the tabs and carefully pull the dummy module out of the slot.

Installing the dummy module

1. Select the right slot for the dummy module.
2. Take hold of the dummy module at the tabs.
3. Press the tabs and carefully push the dummy module into the slot until the latches engage into the recesses intended for them.
4. Release the tabs to allow the latches to engage with a clicking sound.

Installing the option module

1. Select the slot for option module as listed in Table 5-4.
2. Take hold of the option module at the tabs (see Fig. 5-11).
3. Press the tabs and carefully push the option module into the slot until the latches engage into the recesses intended for them.

4. Release the tabs to allow the latches to engage.
5. Check to ensure the option module is properly seated.
6. For option modules [M], [F], [V], [E], [Y] and [I], proceed as described in Chapter 5.2.4.

➔ Connect the electrical supply after installing the positioner (see Chapter 5.6).

➔ Set the parameters of the option module after initialization (see the 'Start-up and configuration' chapter).

i Note

After installing the option module, stick the corresponding labels (see the 'Design and principle of operation' chapter) next to the positioner's nameplate on the housing.

➔ *Take the label out of the packaging.*

Removing the option module

1. Disconnect the connecting cables.
2. Take hold of the option module at the tabs.
3. Press the tabs and carefully pull the option module out of the slot.
4. Store the option module in its packaging.
5. Remove the label from the positioner housing.

Observe the ESD requirements.

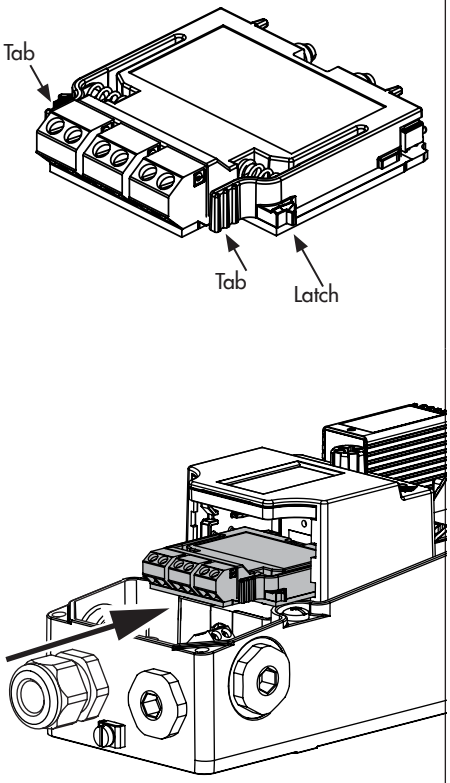

Fig. 5-11: *Installing the option module*

Table 5-4: *Permissible slots for option modules*

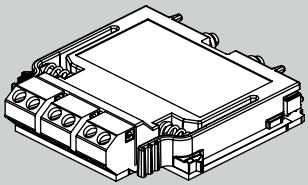

Option module

Article code	Identification	Software limit switches (NAMUR)	Software limit switches (PLC)	Inductive limit switches	Mechanical limit switches	Analog position transmitter	External position sensor I	External position sensor II (4 to 20 mA)	Binary input (contact)	Binary input (24 V)	Forced venting	Binary output	Analog input (4 to 20 mA)	Permissible slot C	Permissible slot D
Z3799-00000	Dummy module													Yes	Yes
Z3799-xxx10	[N]	•										•		Yes	Yes
Z3799-xxx11	[X]		•									•		Yes	Yes
Z3799-xxx15	[P]			•								•		No	Yes
Z3799-xxx21	[F]			•							•			No	Yes
Z3799-xxx30	[M]				•									No	Yes
Z3799-xxx40	[T]					•				•				Yes	Yes
Z3799-xxx50	[E]						•							No	Yes
Z3799-xxx60	[Y]							•				•		No	Yes
Z3799-xxx65	[U]								•	•				Yes	Yes
Z3799-xxx80	[V]									•	•	•		Yes	Yes
Z3799-xxx90	[A]											•	•	Yes	Yes

5.2.4 Preparing option modules for use

Before the positioner can be used with option modules [P], [M], [F], [V], [E], [Y] and [L], further action is necessary after the option modules have been installed to render them ready for use.

a) Hardware limit switches (option modules [P], [M] or [F])

To use the hardware limit switches (mechanical and inductive limit switches), the mechanical assembly unit must be installed in addition to the option module [P], [M] or [F] since limit switches and the option module are connected with each other over signal lines.

NOTICE

Incorrect installation or removal of option modules will damage the positioner.

➔ *Disconnect the electrical power before installing or removing the option modules.*

NOTICE

Electrostatic discharge will damage the option modules.

➔ *Observe the ESD requirements according to IEC 61340-5-1.*

➔ *Only store option modules in their original packaging.*

Installing the hardware limit switch assembly

After the option module has been correctly installed:

1. Guide the mechanical assembly over the display and install it as shown in Fig. 5-12. Make sure that the pinion shaft engages with the gear wheel for transmission of the position pick-up. If it cannot be installed because the gear wheels are in the way, slightly turn the pinion shaft.
2. Carefully push the mechanical assembly unit down as far as it will go.
3. Use a suitable screwdriver to tighten the screws using a tightening torque of 1.2 ± 0.2 Nm.

Note

If the hardware limit switches are installed in the positioner for the first time, the screws tap a thread into the boreholes. In this case, it will be more difficult to screw in the screws. If the mechanical limit switches have been removed, proceed as follows to re-install them:

– *Briefly turn the fastening screws counterclockwise with the screwdriver to engage them into the ready-tapped thread.*
– *Tighten the screws applying a tightening torque of 1.2 ± 0.2 Nm.*

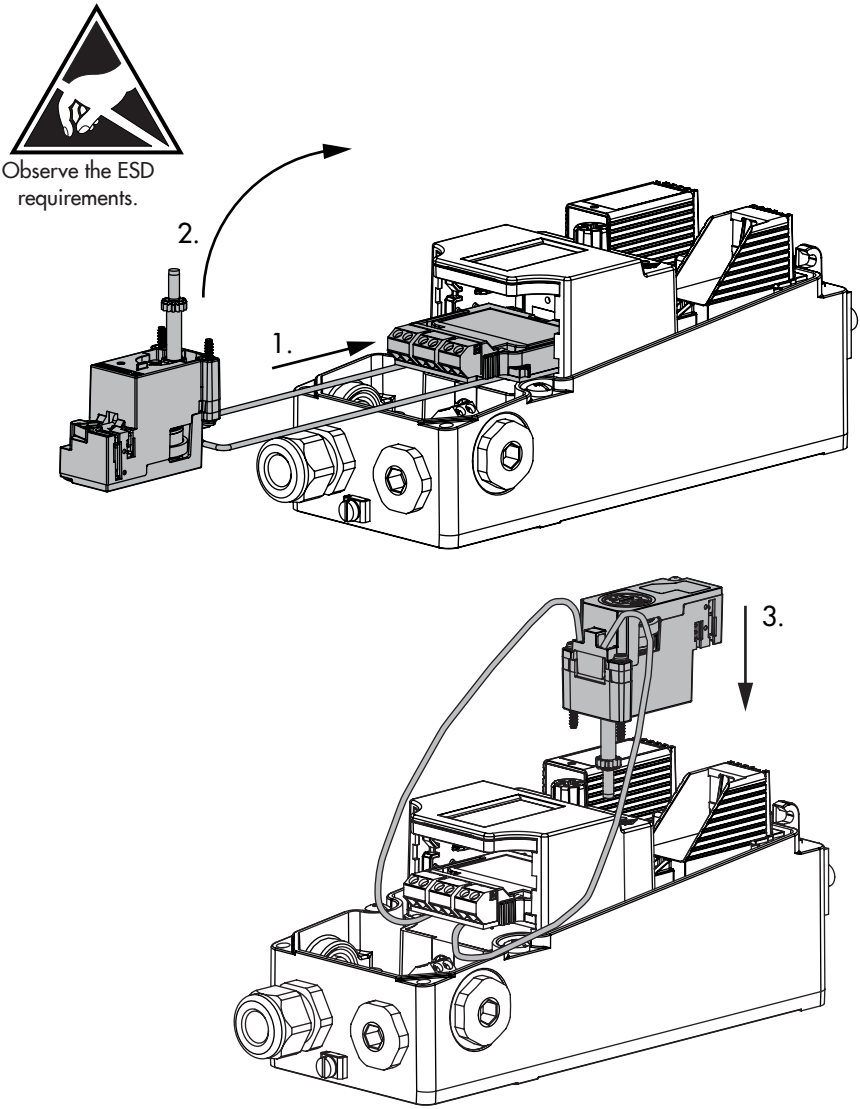

Fig. 5-12: *Installing the hardware limit switches*

4. Clamp the two connecting lines between the electronic module and the positioner housing and push them downward (as shown in Fig. 5-13). Make sure that the wires do not project out of the housing and get caught when closing the housing cover.

➔ Connect the electrical supply after installing the positioner (see Chapter 5.6).

➔ Adjust the switching points on start-up of the positioner (see the 'Start-up and configuration' chapter).

Shaft locking

To lock the positioner shaft on mounting the positioner on the valve, insert a flat-blade screwdriver into the groove of the limit switch assembly and hold the shaft in position 2 (see Fig. 5-15).

! NOTICE

Impermissible turning of the positioner shaft will damage the positioner.
Only adjust the positioner shaft with a flat-blade screwdriver to lock it in place during attachment to the valve.

b) Forced venting (option module [F] or [V])

The switch for the forced venting function is set to the required switch position upon delivery of the positioner. If the option module with forced venting function is installed later or removed, the switch must be set as shown in Fig. 5-14.

➔ Set the switch as shown in Table 5-5 using a flat-blade screwdriver.

i Note

The positioner changes to the fail-safe position if the switch position does not match the option module configuration.

➔ Connect the electrical supply after installing the positioner (see Chapter 5.6).

➔ Set the parameters of the option module after initialization (see the 'Start-up and configuration' chapter).

Table 5-5: *Switch position*

	Option module for forced venting function			
Slot C	Not used	Used	Not used	Used
Slot D	Not used	Not used	Used	Used
Switch position	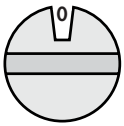	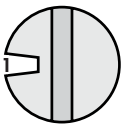	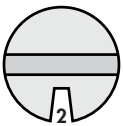	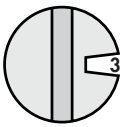

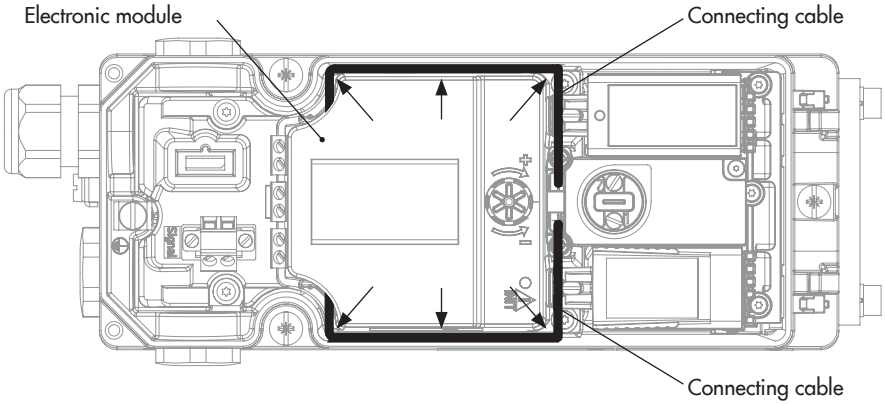

Fig. 5-13: *Routing the connecting lines*

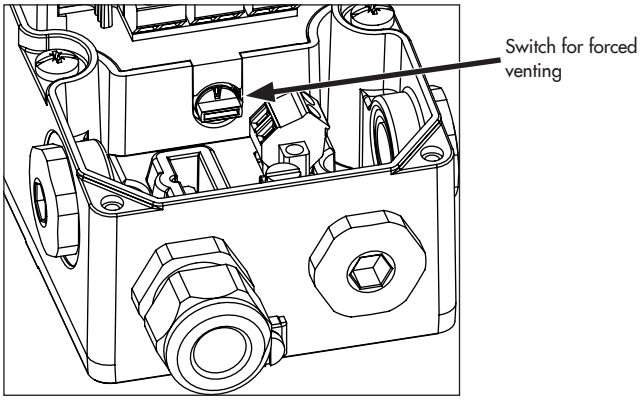

Fig. 5-14: *Switch for forced venting*

c) External position sensor I (option module [E])

To use the external position sensor, the position sensor and positioner must be prepared before they can operate.

➔ Mount the external position sensor on the valve (see Chapter 5.4).

➔ Fasten the connector (1993-2953) onto one of the cable entries on the positioner. Connect the four wires on the option module (see Chapter 5.6).

➔ Remove the lever from the positioner. To prevent any injuries, screw two flat nuts onto the positioner shaft and lock them in place.

➔ Connect the electrical supply after installing the positioner (see Chapter 5.6).

➔ Set the parameters of the option module after initialization (see the 'Start-up and configuration' chapter).

d) External position sensor II (option module [Y])

To use the external position sensor, the position sensor and positioner must be prepared before they can operate.

➔ Mount the external position sensor on the valve (see Chapter 5.4).

➔ Mount the external position sensor according to the specifications given by the sensor manufacturer. Guide the cable through the cable gland.

➔ Remove the lever from the positioner. To prevent any injuries, screw two flat nuts onto the positioner shaft and lock them in place.

➔ Connect the electrical supply after installing the positioner (see Chapter 5.6).

➔ Set the parameters of the option module after initialization (see the 'Start-up and configuration' chapter).

5.3 Positioner attachment

5.3.1 Mounting on Type 3277 Actuator

➔ See Fig. 5-15

➔ Required mounting parts and accessories: see Table 5-8 in Chapter 5.7.

➔ Observe travel tables on page 5-4.

➔ Read instructions in the gray box at the end of this chapter if the positioner is to be operated with air purging function.

1. Place follower clamp (3) on the actuator stem, align it and screw tight so that the mounting screw is located in the groove of the actuator stem.
2. Mount cover plate (10) with narrow side of the cut-out pointing towards the signal pressure connection. Make sure that the glued-on flat gasket (14) points towards the actuator yoke.
3. Check the pin position of the follower pin (2) on M lever (1). Refer to travel tables for type of attachment. If necessary, change the pin position (see Chapter 5.2.1).
4. Insert molded seal (15) into the groove of the positioner housing.
5. Turn the lever counterclockwise until the spring force can be felt (position 1). Continue to turn the lever further to position 2 (see Fig. 5-15, bottom right).
6. Press the shaft lock (see Fig. 5-15, bottom left) to hold the lever in position 2.
   If limit switches are installed in the positioner, read Chapter 5.2.4.
7. Place positioner on the cover plate in such a manner that the follower pin (2) rests on the top of the follower clamp (3). The lever (1) must rest on the follower clamp with spring force.
   Fasten the positioner on the cover plate (10) using the three fastening screws.
8. Make sure that the tip of the gasket (16) projecting from the side of the connection block is positioned to match the actuator symbol for the actuator's fail-safe action "actuator stem extends" or "actuator stem retracts". If this is not the case, unscrew the three fastening screws and lift off the cover. Turn the gasket (16) by 180° and re-insert it.
9. Place the connection block (12) with the associated seals against the positioner and the actuator yoke and fasten using the screw (12.1). For actuators with fail-safe action "actuator stem retracts", additionally remove the blanking plug (12.2) and mount the external signal pressure pipe.
10. Mount cover (11) on the other side.
    Make sure that the vent plug is located at the bottom when the control valve is installed to allow any condensed water that collects to drain off. The outputs 79 and 238 must be sealed with the dummy plate (see Chapter 5.5).

i Note

This type of attachment is not recommended when two pneumatic modules are used as the connection block reduces the K_V coefficient.

Operation with air purging function for single-acting actuators

To use instrument air leaving the positioner for corrosion protection inside the actuator, proceed as follows:

➔ **"Actuator stem extends" direction of action:** remove the blanking plug (12.2) at the connection block and make a pneumatic connection to the actuator chamber on the exhaust side. If an obsolete connection block that is no longer available is used (order no. 1400-8811 or 1400-8812), read the attachment instructions described in Chapter 5.3.2.

➔ The air purging function exists automatically **for "actuator stem retracts" direction of action**.

1 Lever
1.1 Nut
1.2 Disk spring
2 Follower pin
3 Follower clamp
10 Cover plate
11 Cover
11.1 Vent plug
12 Connection block
12.1 Screw
12.2 Blanking plug or connection for external piping
14 Flat gasket
15 Molded seal
16 Gasket

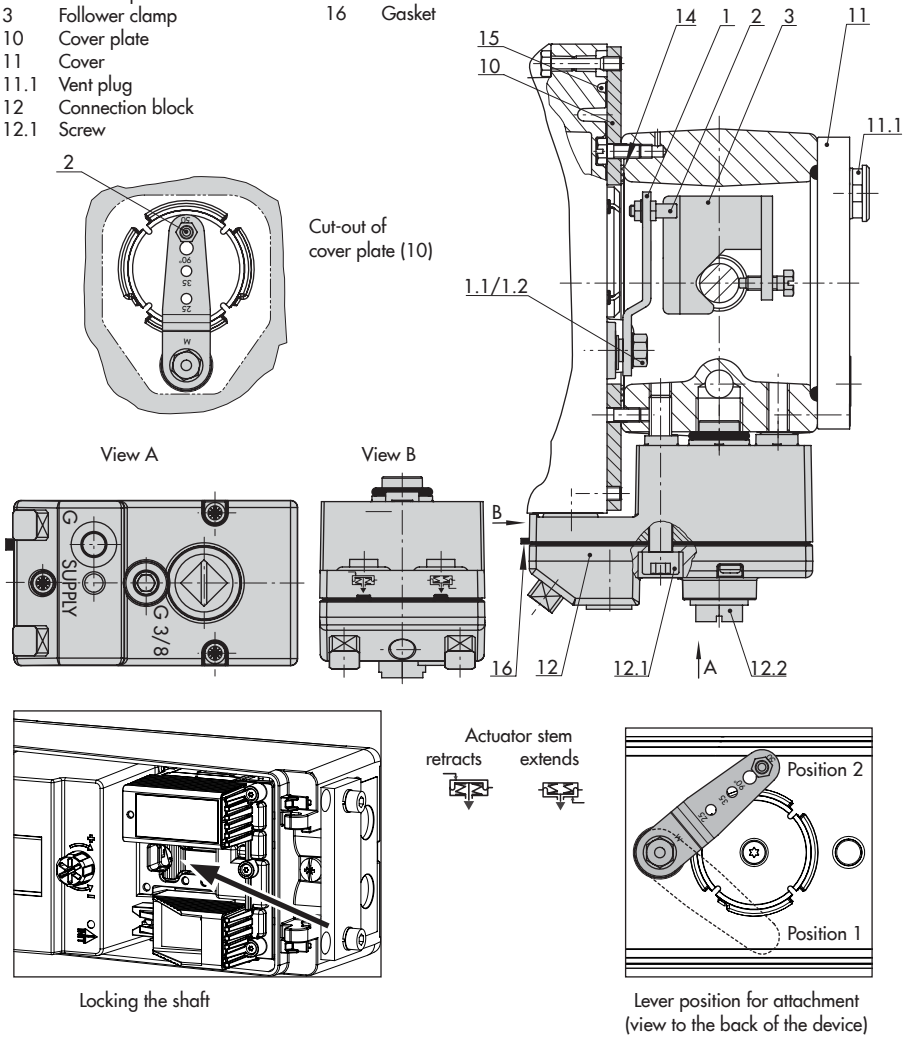

Fig. 5-15: *Direct attachment to Type 3277 Actuator (240, 350, 355 and 750 cm²)*

5.3.2 Attachment according to IEC 60534-6

➔ See Fig. 5-16

➔ Required mounting parts and accessories: see Table 5-9 in Chapter 5.7.

➔ Observe travel tables on page 5-4.

➔ Read instructions in the gray box at the end of this chapter if the positioner is to be operated with air purging function.

1. Screw the two bolts (14) to the bracket (9.1) of the stem connector (9), place the follower plate (3) on top and use the screws (14.1) for fastening.

   Actuator sizes 2800 cm² and 1400 cm² with 120 mm travel:

2. Mount the NAMUR bracket (10):
   – Mount connecting plate (6) or pressure gauge bracket (7) with pressure gauges (8) on the positioner. Make sure that the two seals (6.1) are seated properly.
   – Select required lever (1) **M**, **L** or **XL** and pin position according to the actuator size and valve travel (see Chapter 5.2.1).

3. Place positioner on the NAMUR bracket in such a manner that the follower pin (2) rests in the slot of the follower plate (3, 3.1). Adjust the lever (1) correspondingly.
   Screw the positioner to the NAMUR bracket using the three fastening screws.

Operation with air purging function for single-acting actuators

To use instrument air leaving the positioner for corrosion protection inside the actuator, proceed as follows:

1. Mount the connecting plate and connect output 79 to the actuator's spring chamber.
2. Seal output 238 in single-acting actuators.

Should other valve accessories be used which vent the actuator (e.g. solenoid valve, volume booster, quick exhaust valve), this exhaust air must also be included in the purging function. The connection at the positioner must be protected with a check valve (e.g. screw fitting with restriction G ¼, order no. 1991-5777) or ¼ NPT (order no. 1992-3178) mounted in the piping. Otherwise the pressure in the positioner housing would rise above the ambient pressure and damage the positioner when the exhausting components respond suddenly.

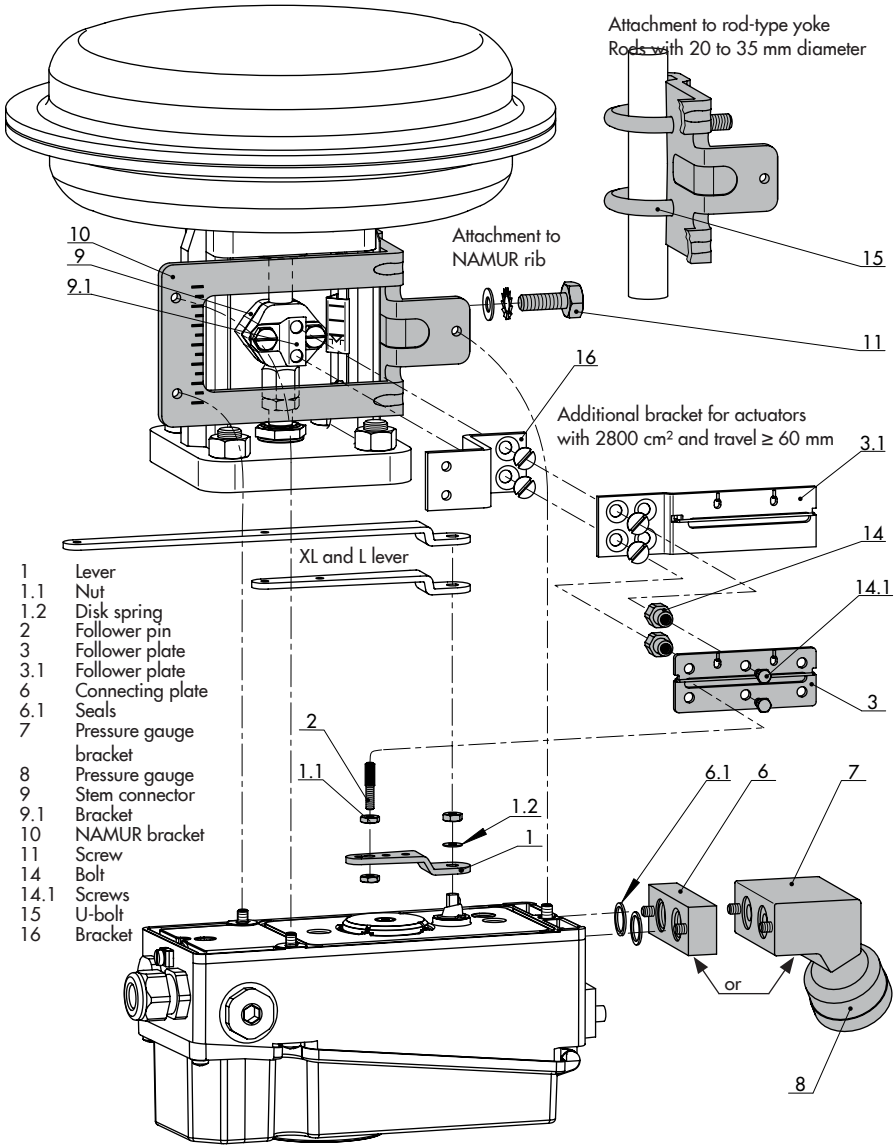

Fig. 5-16: *Attachment according to IEC 60534-6 (NAMUR)*

5.3.3 Attachment according to VDI/VDE 3847

Attachment according to VDI/VDE 3847 allows the positioner to be replaced quickly while the process is running by blocking the air in the actuator.

Note

This type of attachment is not recommended when two pneumatic modules are used as the connection block reduces the K_V coefficient.

Tip

To monitor the supply air and signal pressure, SAMSON recommends mounting pressure gauges (see Chapter 5.7).

a) Attachment to linear actuators (VDE/VDE 3847-1)

The positioner can be attached directly to linear actuators (Type 3277 Actuator) or according to IEC 60534-6 (NAMUR).

The actuator must be blocked in position before the positioner can be changed (see Fig. 5-17)

1. Unscrew the red retaining screw (20).
2. Turn the air blocker (19) on the bottom of the adapter block according to the inscription.

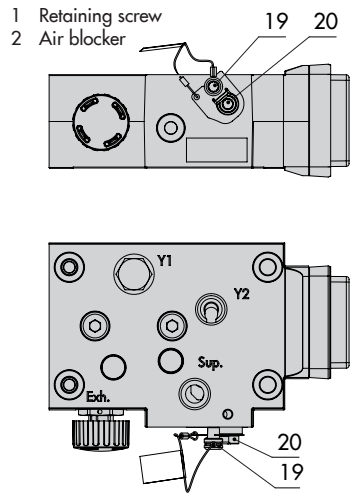

Fig. 5-17: *Adapter block for attachment according to VDI/VDE 3847-1*

Preparing the positioner for attachment

➔ See Fig. 5-19

1. Unscrew the dummy plate (if installed) from the top pneumatic connections of the positioner.
2. Unfasten the turnboard (7) from the adapter bracket (6).
3. Place the adapter bracket (6) on the positioner and mount using the screws (6.1). Make sure that the O-rings are correctly seated.
4. Place the turnboard (7) on the adapter bracket (6). Make sure that the O-rings are correctly seated.
5. Select the required switching function from Fig. 5-18 by turning the turnboard: an arrow on the turnboard points to the

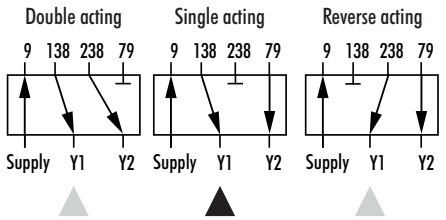

Fig. 5-18: *Label on the adapter bracket*

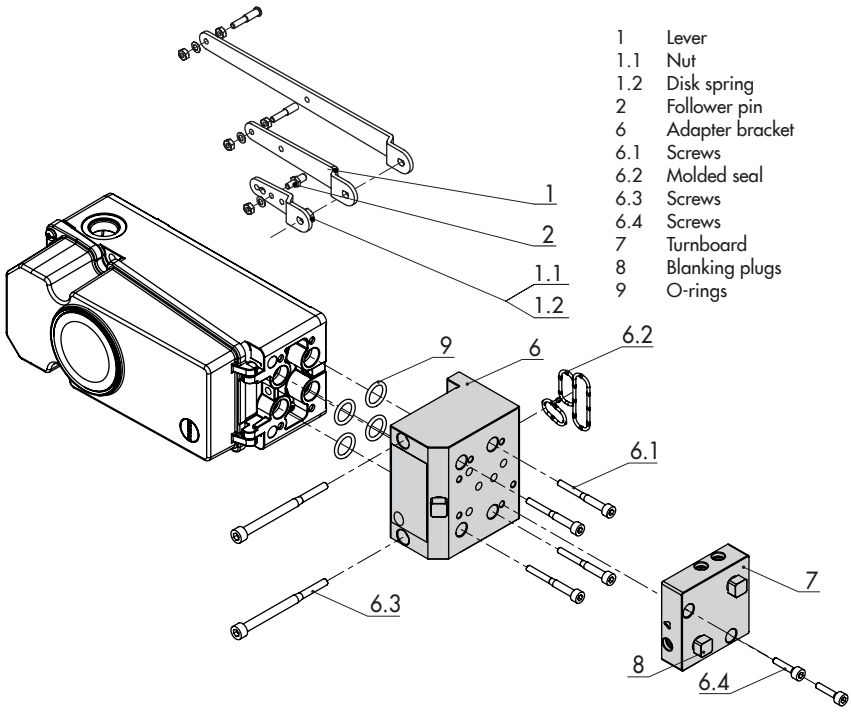

Fig. 5-19: *Mounting the adapter bracket on the positioner*

corresponding switching function (see Fig. 5-18).

6. Insert the molded seal (6.2) in the groove of the adapter bracket (6).
7. Select required lever size (1) M, L or XL and pin position according to the actuator size and valve travel (see travel tables on page 5-4).

Mounting the positioner

➔ Required mounting parts and accessories: see Table 5-10 on page 5-56

➔ See Fig. 5-20

Mount the positioner on the yoke. The signal pressure is routed to the actuator over the connecting plate (12), for actuators with fail-safe action "actuator stem extends" internally through a bore in the valve yoke and for "actuator stem retracts" through external piping.

Only the Y1 port is required for positioner attachment. The Y2 port can be used for air purging of the spring chamber.

1. Place follower clamp (3) on the actuator stem, align it and screw tight so that the mounting screw is located in the groove of the actuator stem.
2. Insert the molded seal (17.1) into the turnboard (17) and mount the turnboard to the adapter block (13) using the screws (17.2).
3. Mount the dummy plate (18) to the turnboard (17) using the screws (18.1). Make sure that the seals are correctly seated.

i Note

A solenoid valve can also be mounted in place of the dummy plate (18). The orientation of the turnboard (17) determines the mounting position of the solenoid valve. Alternatively, a restrictor plate can be mounted (▶ AB 11).

4. Insert the screws (13.1) through the middle holes of the adapter block (13).
5. Place the connecting plate (12) together with the seal (12.1) onto the screws (13.1) corresponding to the fail-safe action "actuator stem extends" or "actuator stem retracts". The fail-safe action that applies is determined by aligning the groove of the adapter block (13) with the groove of the connecting plate (12).
6. Mount the adapter block (13) together with the connecting plate (12) to the actuator using the screws (13.1).
7. Insert the vent plug (11.1) into the **Exh.** connection.
8. For fail-safe action "actuator stem extends", seal the Y1 port with a blanking plug.

   For fail-safe action "actuator stem retracts", connect the Y1 port to the signal pressure connection of the actuator.
9. Press the shaft lock of the prepared positioner (see Fig. 5-15, bottom left) and hold the lever in position 2.
10. Place positioner in such a manner that the follower pin (2) rests on the top of the follower clamp (3). The lever (1) must rest on the follower clamp with spring force.

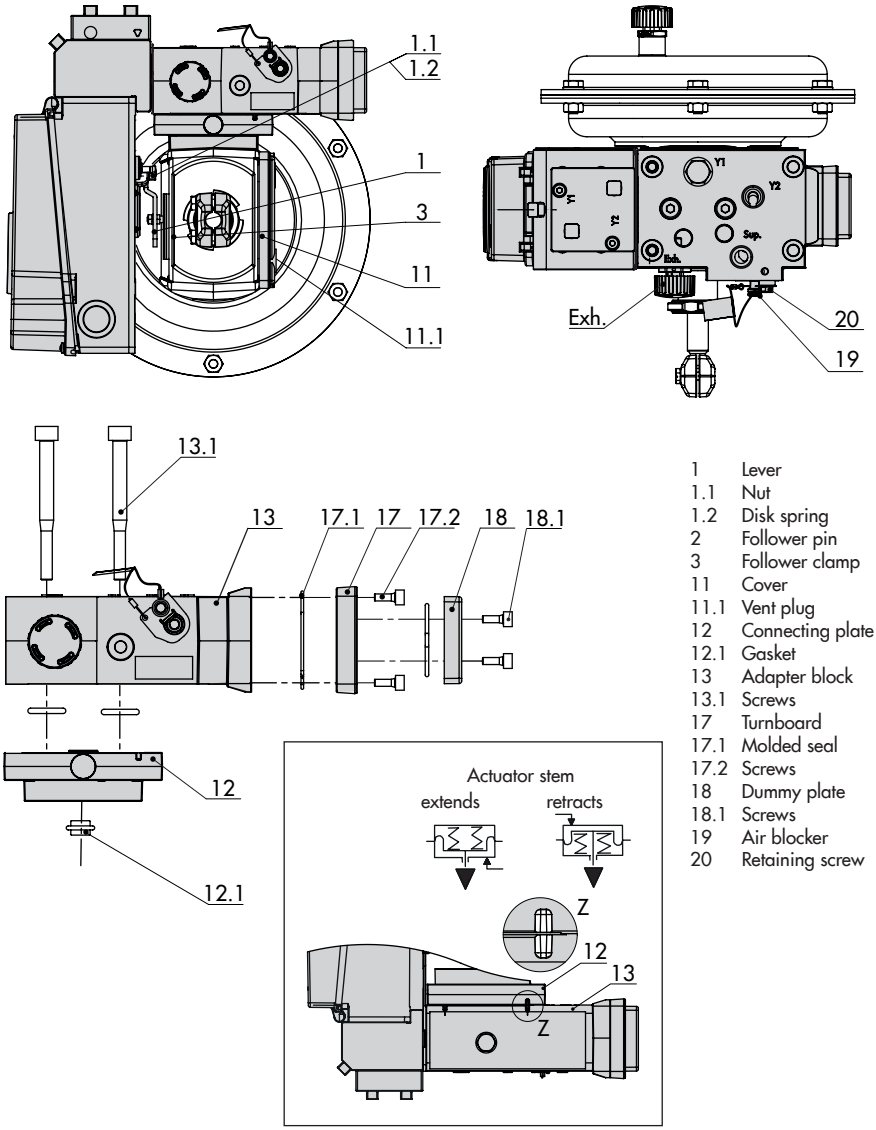

1	Lever
1.1	Nut
1.2	Disk spring
2	Follower pin
3	Follower clamp
11	Cover
11.1	Vent plug
12	Connecting plate
12.1	Gasket
13	Adapter block
13.1	Screws
17	Turnboard
17.1	Molded seal
17.2	Screws
18	Dummy plate
18.1	Screws
19	Air blocker
20	Retaining screw

Fig. 5-20: *Attachment to Type 3277 Actuator according to VDI/VDE 3847-1*

11. Fasten the positioner to the adapter block (13) using the two fastening screws (6.3). Make sure the molded seal (6.2) is properly seated (see Fig. 5-20).
12. Mount cover (11) on the other side. Make sure that the vent plug is located at the bottom when the control valve is installed to allow any condensed water that collects to drain off.

Attachment according to IEC 60534-6 (NAMUR)

➔ Required mounting parts and accessories: see Table 5-10 on page 5-53

➔ Observe travel tables on page 5-4.

➔ See Fig. 5-21

1. Series 240 Valves, actuator size 240 to 1400-60 cm²: Screw the two bolts (14) to the bracket of the stem connector or directly to the stem connector (depending on the version), place the follower plate (3) on top and use the screws (14.1) to fasten it.

   Type 3251 Valve, 350 to 2800 cm²: Screw the longer follower plate (3.1) to the bracket of the stem connector or directly to the stem connector (depending on the version).

   Type 3254 Valve, 1400-120 to 2800 cm²: Screw the two bolts (14) to the bracket (16). Fasten the bracket (16) onto the stem connector, place the follower plate (3) on top and use the screws (14.1) to fasten it.

2. For **attachment to the NAMUR rib**, fasten the NAMUR connection block (10) directly into the existing yoke bore using the screw and toothed lock washer (11). Align the marking on the NAMUR valve connection (on the side marked '1') to 50 % travel.

   For attachment to **valves with rod-type yokes** using the formed plate (15), which is placed around the yoke: screw the four studs into the NAMUR connection block (10). Place the NAMUR connection block on the rod and position the formed plate (15) on the opposite side. Use the nuts and toothed lock washers to fasten the formed plate onto the studs. Align the marking on the NAMUR valve connection (on the side marked '1') to 50 % travel.

3. Insert the molded seal (17.1) into the turnboard (17) and mount the turnboard to the adapter block (13) using the screws (17.2).
4. Mount the dummy plate (18) to the turnboard using the screws (18.1). Make sure that the seals are correctly seated.

i Note

A solenoid valve can also be mounted in place of the dummy plate (18). The orientation of the turnboard (17) determines the mounting position of the solenoid valve. Alternatively, a restrictor plate can be mounted (▶ AB 11).

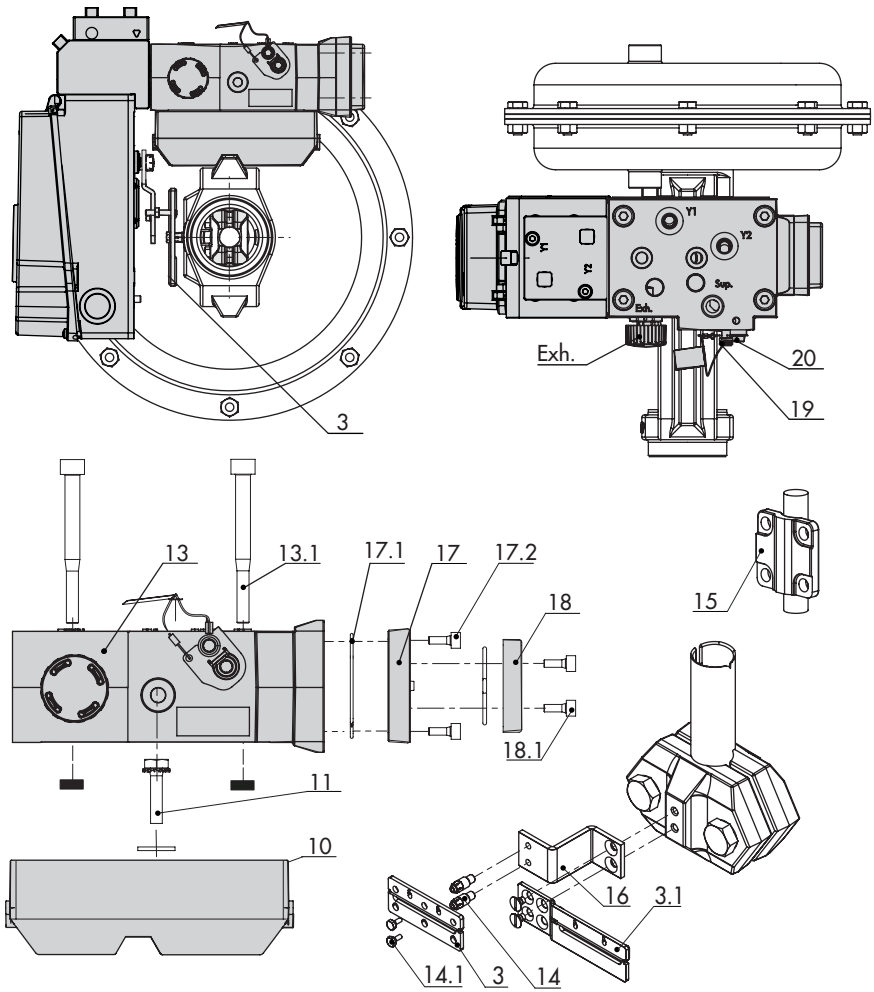

2	Follower pin	13	Adapter block	17	Turnboard
3	Follower plate	13.1	Screws	17.1	Molded seal
3.1	Follower plate	14	Bolt	17.2	Screws
10	NAMUR connection block	14.1	Screws	18	Dummy plate
11	Screw with toothed lock washer	15	Formed plate	18.1	Screws
		16	Bracket	19	Air blocker
				20	Retaining screw

Fig. 5-21: *Attachment according to IEC 60534-6 (NAMUR) and VDI/VDE 3847-1*

5. Fasten the adapter block (13) to the NAMUR connection block using the screws (13.1).
6. Insert the vent plug into the Exh. connection.
7. Place the positioner on the adapter block (13) in such a manner that the follower pin (2) rests on the top of the follower plate (3, 3.1). Adjust the lever (1) correspondingly.
8. Select required lever size (1) M, L or XL and pin position according to the actuator size and valve travel (see travel tables on page 5-4).
9. Fasten the positioner to the adapter block (13) using the two fastening screws (6.3). Make sure the molded seal (6.2) is properly seated.
10. For **single-acting actuators without air purging**, connect the Y1 port of the adapter block to the signal pressure connection of the actuator. Seal the Y2 port with a blanking plug.

    For **double-acting actuators and actuators with air purging**, connect the Y2 port of the adapter block to the signal pressure connection of the second actuator chamber or spring chamber of the actuator. Seal the Exh. connection in the adapter block with a blanking plug.

b) Attachment to rotary actuators (VDI/VDE 3847-2)

The actuator must be blocked in position before the positioner can be changed (see Fig. 5-22)

1. Unscrew the red retaining screw (1).
2. Turn the air blocker (2) on the bottom of the adapter block according to the inscription.

Preparing the positioner for attachment

➔ See Fig. 5-24

1. Unscrew the dummy plate (if installed) from the top pneumatic connections of the positioner.
2. Unfasten the turnboard (7) from the adapter bracket (6).
3. Place the adapter bracket (6) on the positioner and mount using the screws (6.1). Make sure that the O-rings are correctly seated.
4. Place the turnboard (7) on the adapter bracket (6). Make sure that the O-rings are correctly seated.
5. Select the required switching function from Fig. 5-23 by turning the turnboard: an arrow on the turnboard points to the corresponding switching function (see Fig. 5-18).
6. Take follower pin on the lever (M) out of its pin position and place in position 90°.

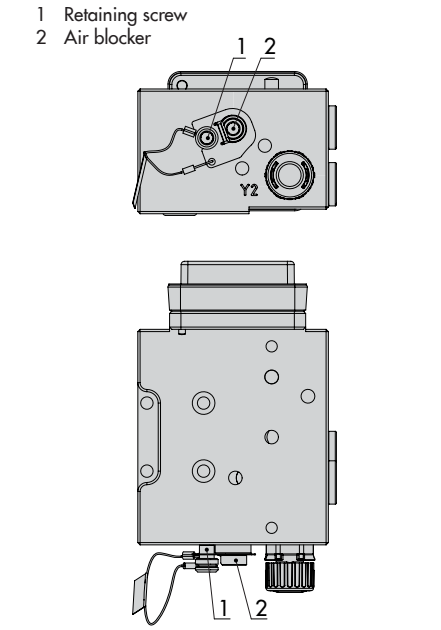

Fig. 5-22: *Adapter block for attachment according to VDI/VDE 3847-2*

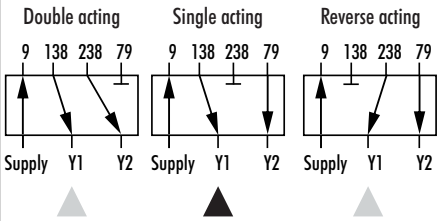

Fig. 5-23: *Label on the adapter bracket*

Mounting the positioner

➔ Required mounting parts and accessories: see Table 5-11 in Chapter 5.7.

➔ See Fig. 5-24

1. Fasten the adapter block (1) to the actuator's NAMUR interface using the four fastening screws (2). Make sure that the seals are correctly seated.
2. Mount the follower wheel (3) onto the actuator shaft. Use the matching shaft adapter (see Table 5-11in Chapter 5.7).
3. Place the adapter bracket (4) onto the adapter block (1) and fasten it using the fastening screws (5). Make sure that the seals are correctly seated.
4. Insert and fasten the follower pin in the 90° position on the positioner's lever. Only use the longer follower pin included in the mounting kit.
5. Align the positioner on the adapter bracket (1) in such a way that the follower pin engages into the actuator's follower wheel (3).
6. Fasten the positioner onto the adapter bracket (6.4) using the fastening screws (6). Make sure that the seals are correctly seated.
7. Fasten the protective cover between the actuator and positioner to enclose the follower wheel.

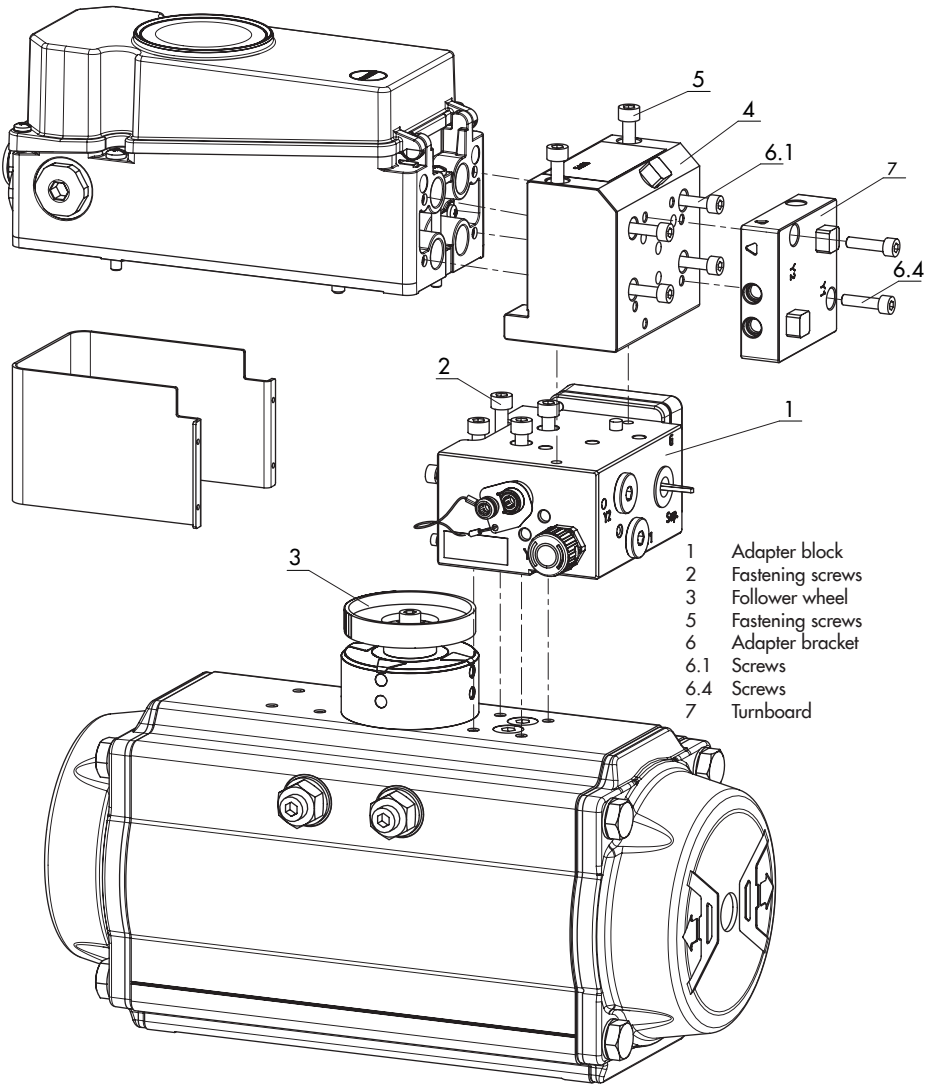

Fig. 5-24: *Attachment according to VDI/VDE 3847-2 with single-acting actuator*

Mounting a solenoid valve

➔ See Fig. 5-25

A solenoid valve (13) can also be mounted in place of the dummy plate (12). The orientation of the turnboard (14) determines the mounting position of the solenoid valve. Alternatively, a restrictor plate can be mounted. Further information can be found in the document ▶ AB 11 (Accessories for Solenoid Valves).

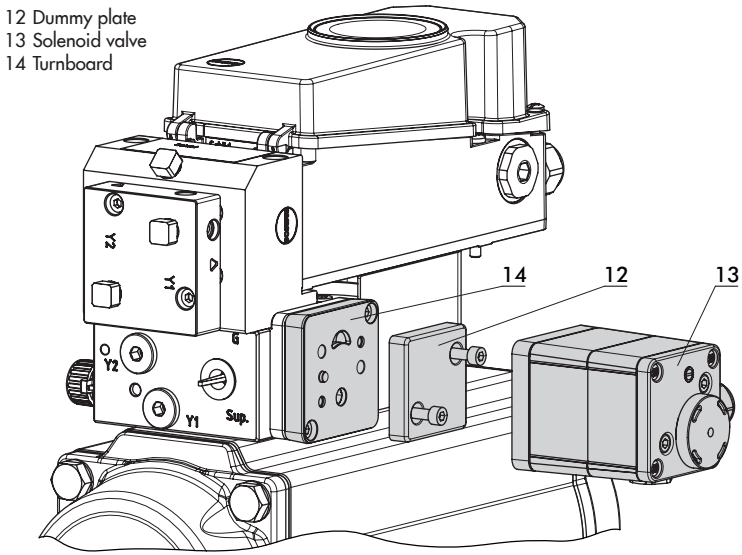

Fig. 5-25: *Attachment of a solenoid valve according to VDI/VDE 3847*

5.3.4 Attachment according to VDI/VDE 3845 and to Type 3278, VETEC S160 and R

➔ See Fig. 5-27

NOTICE

Risk of positioner damage due to incorrect direction of rotation of the rotary actuator.

➔ *Observe the actuator's direction of rotation on attaching the positioner as described below.*

➔ Required mounting parts and accessories: see Table 5-13 in Chapter 5.7.

➔ Prepare actuator and mount possibly required adapter supplied by the actuator manufacturer.

1. Mount the housing (10) onto the rotary actuator. In case of VDI/VDE attachment, place spacers (11) underneath, if necessary.
   Details and dimensions for the fixing levels with VDI/VDE 3845 can be found in the 'Design and principle of operation' chapter.
2. For **SAMSON Type 3278 and VETEC S160 Rotary Actuators**, fasten the adapter (5) onto the free end of the shaft and for **VETEC R Actuator**, place on the adapter (5.1). For **Type 3278, VETEC S160** and **VETEC R** Actuators, place on the adapter (3). For VDI/VDE version, this step depends on the actuator size.
3. Stick adhesive label (4.3) onto the coupling wheel in such a manner that the yellow part of the sticker is visible in the window of the housing when the valve is OPEN (adhesive labels with explanatory symbols are enclosed and can be stuck on the housing, if required).
4. Fasten coupling wheel (4) on the slotted actuator shaft or adapter (3) using screw (4.1) and disk spring (4.2).
5. Unscrew the standard follower pin (2) from the positioner's M lever (1).
   Attach the follower pin (Ø5 mm) included in the mounting kit to pin position 90°.
6. Place positioner on housing (10) and screw it tight. Taking the actuator's direction of rotation into account, adjust lever (1) so that it engages in the correct slot with its follower pin (see Fig. 5-26).

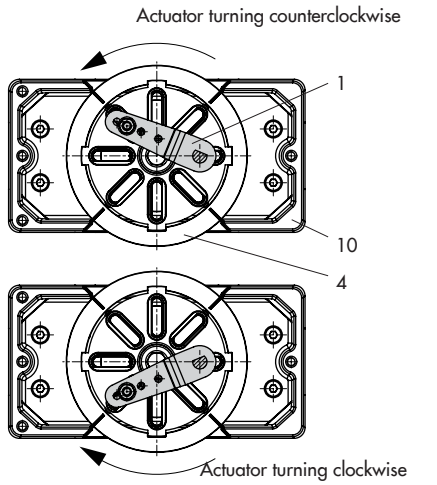

Fig. 5-26: *Direction of rotation*

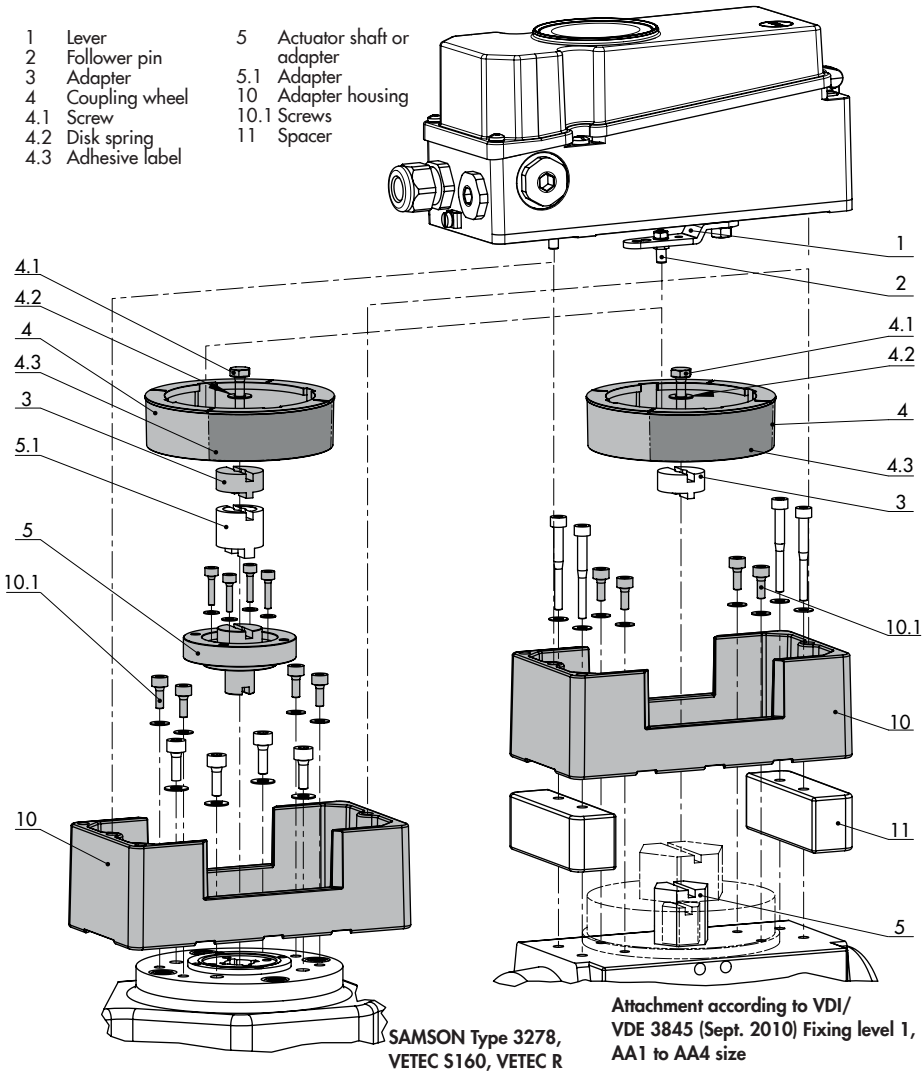

Fig. 5-27: *Attachment to rotary actuators (heavy-duty version)*

5.4 Mounting the external position sensor

Note

The processing of the valve position measured by the external position sensor is only possible if the positioner is fitted with the option module (Z3799-xxx50 [E]) with external position sensor I.

➔ Required mounting parts and accessories: see Table 5-12 on page 5-57.

In the positioner version with an external position sensor, the sensor located in a separate housing is attached over a plate or bracket to the control valve. The travel pick-off corresponds to that of a standard device. The positioner can be mounted as required to a wall or a pipe.

Pneumatic connection

– Either a connecting plate or a pressure gauge bracket must be fixed to the positioner housing, depending on the accessory chosen. Make sure the seals are correctly inserted.
– The supply air is connected as described in Chapter 5.5.

Electrical connection

– A connecting lead (10 meter, with M12x1 connectors) is included in the scope of delivery of the position sensor.
– The electrical connection is performed as described in Chapter 5.6.

Note

Since 2009, the back of the position sensor (20) is fitted with two pins acting as mechanical stops for the lever (1). If this position sensor is mounted using old mounting parts, two corresponding ∅ 8 mm holes must be drilled into the mounting plate/bracket. A template is available for this purpose (see Table 5-12 in Chapter 5.7).

5.4.1 Mounting for Type 3277 Actuator

➔ See Fig. 5-28

Type 3277 Actuator with 240 to 750 cm²:

The signal pressure is routed to the connection at the side of the actuator yoke for the version with fail-safe action "actuator stem extends". For the fail-safe action "actuator stem retracts" the connection on the top diaphragm case is used. The connection at the side of the yoke must be fitted with a venting plug (accessories).

1. Place the lever (1) on the sensor in mid-position and hold it in place. Unthread the nut (1.1) and remove the lever together with the disk spring (1.2) from the sensor shaft.
2. Screw the position sensor (4) onto the mounting plate (5).
3. Depending on the actuator size and rated valve travel, determine which lever and position of the follower pin (2) is to be used from the travel table on page 5-4. The positioner is delivered

with the **M** lever in pin position **35** on the sensor. If necessary, remove the follower pin (2) from its pin position and move it to the hole for the recommended pin position and screw tight.

4. Place the lever (1) and disk spring (1.2) on the sensor shaft. Place the lever in mid-position and hold it in place. Screw on the nut (1.1).
5. Place follower clamp (3) on the actuator stem, align it and screw tight so that the mounting screw is located in the groove of the actuator stem.
6. Place the mounting plate together with the sensor onto the actuator yoke so that the follower pin (2) rests on the top of the follower clamp (3). It must rest on it with spring force. Fasten the mounting plate (5) onto the actuator yoke using both fixing screws.
7. Mount cover (6) on the other side. Make sure that the vent plug is located at the bottom when the control valve is installed to allow any condensed water that collects to drain off.

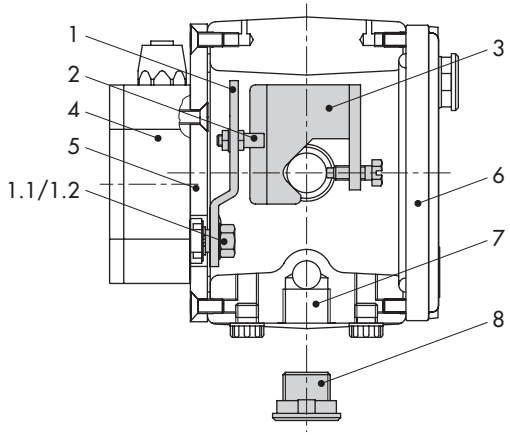

1	Lever
1.1	Nut
1.2	Disk spring
2	Follower pin
3	Follower clamp
4	Position sensor
5	Mounting plate
6	Cover
7	Signal pressure
8	Vent plug

Fig. 5-28: *Mounting for Type 3277 Actuator*

5.4.2 Mounting according to IEC 60534-6 (NAMUR)

➔ Required mounting parts and accessories: see Table 5-12 in Chapter 5.7

➔ See Fig. 5-29.

1. Place the lever (1) on the position sensor in mid-position and hold it in place. Unthread the nut (1.1) and remove the lever together with the disk spring (1.2) from the sensor shaft.
2. Screw the position sensor (20) onto the bracket (21).

The standard attached **M** lever with the follower pin (2) at position **35** is designed for 120 to 350 cm² actuators with 15 mm rated travel. For other actuator sizes or travels, select the lever and pin position from the travel table on page 5-4. L and **XL** levers are included in the mounting kit.

3. Place the lever (1) and disk spring (1.2) on the sensor shaft. Place the lever in mid-position and hold it in place. Screw on the nut (1.1).
4. Screw the two bolts (14) to the bracket (9.1) of the stem connector (9), place the follower plate (3) on top and use the screws (14.1) for fastening.
5. Place the bracket with the sensor at the NAMUR rib in such a manner that the follower pin (2) rests in the slot of the follower plate (3), then screw the bracket using its fixing screws onto the valve.

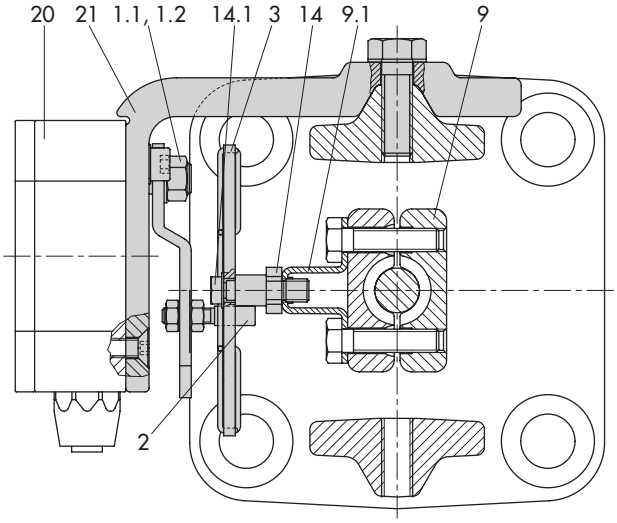

1	Lever
1.1	Nut
1.2	Disk spring
2	Follower pin
3	Follower plate
9	Stem connector
9.1	Bracket
14	Bolt
14.1	Screws
20	Position sensor
21	Bracket

Fig. 5-29: *Mounting according to IEC 60534-6 (NAMUR)*

5.4.3 Mounting on rotary actuators

➔ Required mounting parts and accessories: see Table 5-12 in Chapter 5.7

➔ See 5-39.

1. Place the lever (1) on the position sensor in mid-position and hold it in place. Unthread the nut (1.1) and remove the lever together with the disk spring (1.2) from the sensor shaft.
2. Screw the position sensor (20) onto the mounting plate (21).
3. Replace the follower pin (2) normally attached to the lever (1) with the metal follower pin (Ø 5 mm) from the accessories and screw it into the hole for pin position 90°.
4. Place the lever (1) and disk spring (1.2) on the sensor shaft. Place the lever in mid-position and hold it in place. Screw on the nut (1.1).

Follow the instructions describing attachment to the standard positioner in Chapter 5.3.

Instead of the positioner, attach the position sensor (20) with its mounting plate (21).

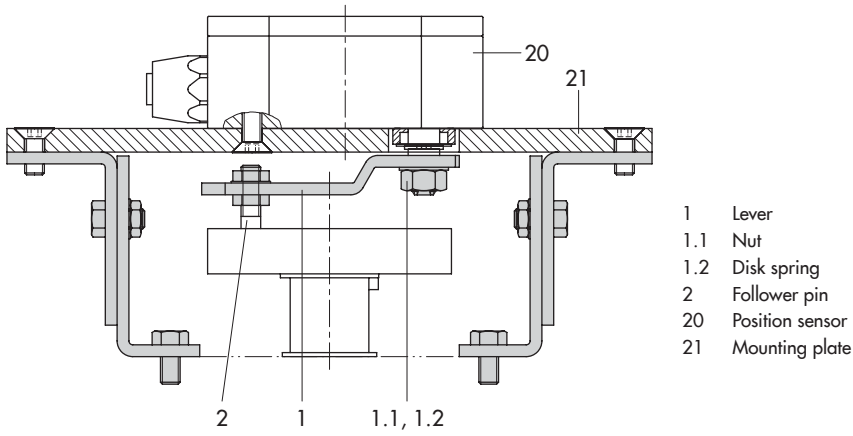

Fig. 5-30: *Mounting on rotary actuators*

5.5 Pneumatic connection

NOTICE

Incorrect connection of the supply air will damage the positioner and will lead to malfunction.

➔ *Screw the screw fittings into the connecting plate, pressure gauge mounting block or connection block from the accessories.*

NOTICE

Risk of malfunction due to failure to comply with air quality requirements.

➔ *Only use supply air that is dry and free of oil and dust.*

➔ *Read the maintenance instructions for upstream pressure reducing stations.*

➔ *Blow through all air pipes and hoses thoroughly before connecting them.*

The four pneumatic outputs are located on the back of the positioner (see Fig. 5-31).

The availability of the Outputs 138 and 238 depends on the pneumatic module combination.

Note

*If **one** pneumatic module is used, the entire air passage (screw fitting, pipe, mounting plate etc.) must have a minimum inside diameter of 5.9 mm.*
*If **two** pneumatic modules are used, the entire air passage (screw fitting, pipe, mounting plate etc.) must have a minimum inside diameter of 7 mm.*

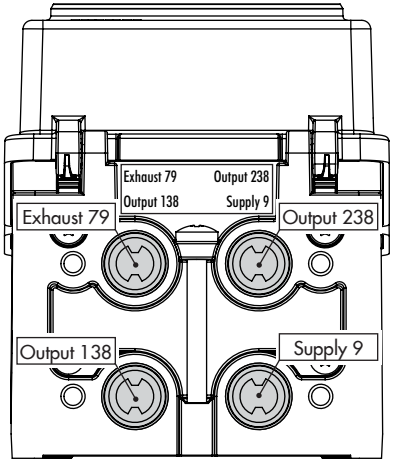

Fig. 5-31: *Pneumatic outputs*

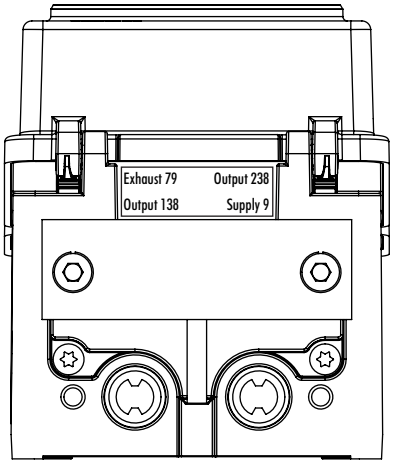

Fig. 5-32: *Output 238 and Exhaust 79 sealed with dummy plate*

We recommend using a larger inside diameter as the air capacity is further reduced by any turns and kinks in the air passage.

Connecting the supply air

Before performing the pneumatic connection, make sure the following conditions are met:

– The positioner is properly mounted onto the control valve.

If this is the case:

➔ Seal Output 238 and Exhaust 79 with a dummy plate (see Fig. 5-32) if only one pneumatic output is available.

➔ Perform the pneumatic connections in the connecting plate, pressure gauge mounting block and connection block (optionally designed as a bore with ¼ NPT or G ¼ thread). Customary fittings for metal or copper tubing or plastic hoses can be used.

5.5.1 Signal pressure connection

The signal pressure connection depends on how the positioner is mounted onto the actuator:

Type 3277 Actuator

➔ The signal pressure connection is fixed.

Attachment according to IEC 60534-6

➔ For "actuator stem retracts" fail-safe action: connect the signal pressure to the connection on top of the actuator.

➔ For "actuator stem extends" fail-safe action: connect the signal pressure to the connection on bottom of the actuator.

Rotary actuators (heavy-duty version)

➔ For rotary actuators, the manufacturer's specifications for connection apply.

5.5.2 Output signal display

Tip

To monitor the supply air and signal pressure, SAMSON recommends mounting pressure gauges (see Chapter 5.7).

Mounting the pressure gauges:

➔ See Chapter 5.4.2 and Fig. 5-16

5.5.3 Supply pressure

The required supply air pressure depends on the bench range and the actuator's direction of action (fail-safe action).

The bench range is written on the nameplate either as the bench range or signal pressure range depending on the actuator. The direction of action is marked FA or FE or by a symbol.

Actuator stem extends FA (AIR TO OPEN)

Fail-close (for globe and angle valves):

➔ Required supply pressure = Upper bench range value + 0.2 bar, at least 2.5 bar.

Actuator stem retracts FE (AIR TO CLOSE)

Fail-open (for globe and angle valves):

For tight-closing valves, the maximum signal pressure pst_{max} is roughly estimated as follows:

$$pst_{max} = F + \frac{d^2 \cdot \pi \cdot \Delta p}{4 \cdot A} \text{ [bar]}$$

d = Seat diameter [cm]
Δp = Differential pressure across the valve [bar]
A = Actuator area [cm²]
F = Upper bench range value of the actuator [bar]

If there are no specifications, calculate as follows:

➔ Required supply pressure = Upper bench range value + 1 bar, at least 2.5 bar.

5.5.4 Typical applications and hook-ups

Typical applications and hook-ups of the TROVIS 3793 Positioner are listed below. Besides mounting the positioner onto a pneumatic actuator, the possible combinations of pneumatic modules must be taken into account. The permissible possible combinations listed in Fig. 5-6 apply in this case.

Typical application with single-acting actuators

The signal at output 138 is used to control a single-acting pneumatic actuator. The outputs 238 and 79 are sealed (see Fig. 5-32). The air capacity can be doubled by using two pneumatic modules.

In this case, the positioner is fitted with the following pneumatic modules:

Combination	Slot A	Slot B	Air capacity
Combination 1	P3799-0001 module (single and double acting)	P3799-0000 module (dummy module)	K_{VS} 0.35
Combination 2	P3799-0001 module (single and double acting)	P3799-0001 module (single and double acting)	K_{VS} 0.70

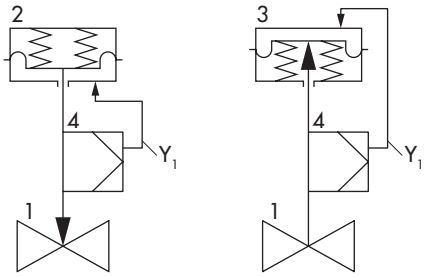

1 Valve
2 Actuator with "stem extends" fail-safe action
3 Actuator with "stem retracts" fail-safe action
4 Positioner
Y_1 Output 138

Typical application with double-acting actuator

The two outputs of the positioner are used to control a double-acting pneumatic actuator. Output 79 is be sealed by a blanking plug. The output 138 is vented and the output 238 is supplied with air during fail-safe action. The air capacity can be doubled by using two pneumatic modules.

In this case, the positioner is fitted with the following pneumatic modules:

Combination	Slot A	Slot B	Air capacity
Combination 1	P3799-0001 module (single and double acting)	P3799-0000 module (dummy module)	K_{VS} 0.35
Combination 2	P3799-0001 module (single and double acting)	P3799-0001 module (single and double acting)	K_{VS} 0.70

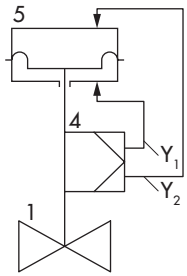

1 Valve
4 Positioner
5 Double-acting actuator
Y_1 Output 138
Y_2 Output 238

Single-acting with air purging of the actuator's spring chamber

The signal at output 138 is used to control a single-acting pneumatic actuator. The actuator's spring chamber is additionally purged with instrument air over the output 79 (Exhaust) of the positioner to protect the inside of the actuator against corrosion. Output 238 must be sealed by a blanking plug. The air capacity can be doubled by using two pneumatic modules.

In this case, the positioner is fitted with the following pneumatic modules:

Combination	Slot A	Slot B	Air capacity
Combination 1	P3799-0001 module (single and double acting)	P3799-0000 module (dummy module)	K_{VS} 0.35
Combination 2	P3799-0001 module (single and double acting)	P3799-0001 module (single and double acting)	K_{VS} 0.70

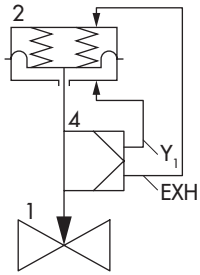

1 Valve
2 Single-acting actuator
4 Positioner
Y_1 Output 138
EXH Output 79 (Exhaust)

Large-signal/small-signal mode

Large-signal/small-signal mode can be used when faster actuating times with a high control accuracy are required. In this case, a small signal is supplied directly to the actuator over output 138. For large step changes, output 238 of the positioner is used to pass on the signal to one or more valve accessories (e.g. volume booster). Output 79 is used for air purging of the actuator's spring chamber or can be sealed by a blanking plug.

Advantages of this model include:
- Short actuating times
- Less overshooting
- Shorter settling times
- Smaller set point deviation
- Larger and faster steps
- Exact control for small step changes

The use of the large-signal/small-signal mode is only possible with single-acting actuators. In this case, the positioner is fitted with the following pneumatic modules:

Combination	Slot A	Slot B	Air capacity
Combination 3	P3799-0002 module (single acting)	P3799-0003 module (single acting)	K_{VS} 0.35

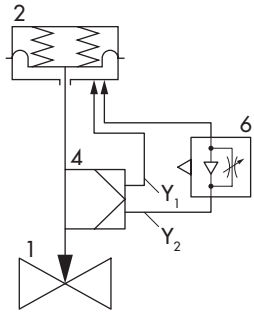

1 Valve
2 Actuator
4 Positioner
6 Valve accessories (volume booster in this example)
Y_1 Output 138
Y_2 Output 238

Use of the fail-in-place function

The signal at output 138 is used to control a single-acting pneumatic actuator. The outputs 238 and 79 are sealed (see Fig. 5-32). If the fail-in-place function is triggered, the pneumatic output of the positioner is closed and the actuator remains in its last position. This happens when the positioner changes to the ***SAFE*** mode (e.g. after the signal falls below 3.8 or 4.4 mA or when the forced venting is activated).

How long the actuator can remain in its last position depends on the actuator's ability to hold air and the connecting line between the positioner and actuator. The actuator position is controlled again as soon as the positioner leaves the ***SAFE*** mode.

The use of the fail-in-place module is only possible with single-acting actuators. In this

case, the positioner is fitted with the following pneumatic modules:

Combination	Slot A	Slot B	Air capacity
Combination 4	P3799-0003 module (single acting)	P3799-0004 module (fail-in-place function)	K_{VS} 0.35

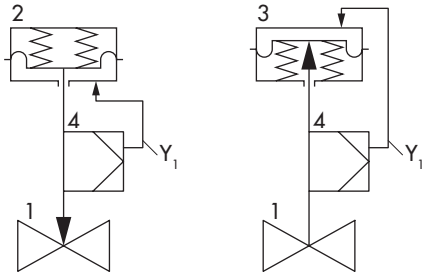

1 Valve
2 Actuator with "stem extends" fail-safe action
3 Actuator with "stem retracts" fail-safe action
4 Positioner
Y_1 Output 138

5.6 Establishing electrical connections

⚠ WARNING

Incorrect electrical connection will render the explosion protection unsafe.

➔ *Adhere to the terminal assignment.*

➔ *Do not undo the enameled screws.*

➔ *Do not exceed the maximum permissible values specified in the EC type examination certificates when interconnecting intrinsically safe electrical equipment (U_i or U_0, I_i or I_0, P_i or P_0, C_i or C_0 and L_i or L_0).*

Selecting cables and wires

➔ Observe the relevant clauses of EN 60079-14 for installation of intrinsically safe circuits.

➔ Seal cable entries left unused with plugs.

➔ Fit equipment used in ambient temperatures below –20 °C with metal cable entries.

Equipment with type of protection Ex nA and Ex ec

In equipment operated according to type of protection Ex nA (non-sparking equipment) and Ex ec (increased safety), circuits may be connected, interrupted or switched while energized only during installation, maintenance or repair.

Use certified cable glands and blanking plugs with appropriate type of protection and IP rating ≥ 6X and suitable for the certified temperature range.

The signal circuit is connected using screw terminals (terminal 11/12) for electrical conductors with a wire cross-section from 0.2 to 2.5 mm². The tightening torque is 0.5 to 0.6 Nm.

The option modules' circuits are connected using screw terminals for electrical conductors with a wire cross-section from 0.14 to 1.5 mm². The tightening torque is 0.5 to 0.6 Nm.

Equipment with type of protection Ex t

In equipment operated according to type of protection Ex t (protection by enclosure), circuits may be connected, interrupted or switched while energized only during installation, maintenance or repair.

Opening the enclosure cover in potentially explosive dust atmospheres during operation may cause the explosion protection to become ineffective.

Use certified cable glands and blanking plugs with appropriate type of protection and IP rating ≥ 6X and suitable for the certified temperature range.

The signal circuit is connected using screw terminals (terminal 11/12) for electrical conductors with a wire cross-section from 0.2 to 2.5 mm². The tightening torque is 0.5 to 0.6 Nm.

The option modules' circuits are connected using screw terminals for electrical conductors with a wire cross-section from 0.14 to 1.5 mm². The tightening torque is 0.5 to 0.6 Nm.

Cable entry with cable gland

The enclosure of the positioner has four threaded boreholes, which can be fitted with cable glands as required.

➔ The cable gland version depends on the ambient temperature range (see technical data in the 'Design and principle of operation' chapter).

➔ See Chapter 5.7 for available cable glands.

➔ The screw terminals are designed for wire cross-sections of 0.2 to 2.5 mm² (tightening torque 0.5 Nm).

➔ Connect **one** current source at the maximum.

In general, it is not necessary to connect the device to a bonding conductor. Should this be required, however, this conductor can be connected inside or outside of the device.

Connecting the electrical power

Before performing the pneumatic connection, make sure the following conditions are met:

– The positioner is properly mounted onto the control valve.

– The air supply is properly connected.

If this is the case:

➔ Wire the connections of the option modules as shown in Table 5-6.

➔ Connect the electrical power (mA signal) at the positioner as shown in Fig. 5-33.

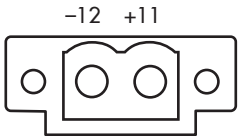

Fig. 5-33: *Terminal assignment*

5.6.1 Establishing HART® communication

Communication between computer and positioner using an FSK modem or handheld communicator (if necessary, using an isolation amplifier) is based on the HART® protocol.

Viator FSK modem

USB	No explosion protection	Order no. 100172502

If the load impedance of the controller or control station is too low, an isolation amplifier must be connected between controller and positioner (interfacing as for positioner connected in hazardous areas). See 5-56.

If the positioner is used in hazardous areas, an explosion-protected isolation amplifier must be used.

Using the HART® protocol, all connected control room and field units can be addressed individually with their address using a standard bus.

Standard bus:

In the standard bus mode, the positioner follows the analog set point. The bus address/polling address has to be within a range of 1 to 15.

When communication errors occur:

Communication errors may occur when the process controller/control station output is not HART®-compatible.

Alternatively, a 250 Ω resistor can be connected in series and a 22 µF capacitor can be connected in parallel to the analog output of positioners without explosion protection and positioners with type of protection Ex tb (Fig. 5-34). The load for the controller output will increase as a result.

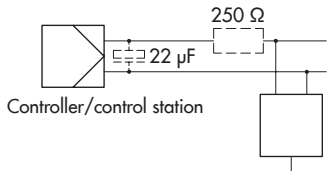

Fig. 5-34: *Adapting the output signal*

5.6.2 Switching amplifier according to EN 60947-5-6

For operation of the limit switches, switching amplifiers must be connected in the output circuit. They must comply with the limit values of the output circuits conforming to EN 60947-5-6.

➔ Observe the relevant regulations for installation in hazardous areas.

For applications in safe areas (non-hazardous areas), software limit switches can be directly interconnected to the binary input of the PLC in accordance with IEC 61131. This applies to the standard operating range for digital inputs according to Clause 5.2.1.2 of IEC 61131-2 with the rated voltage of 24 V DC.

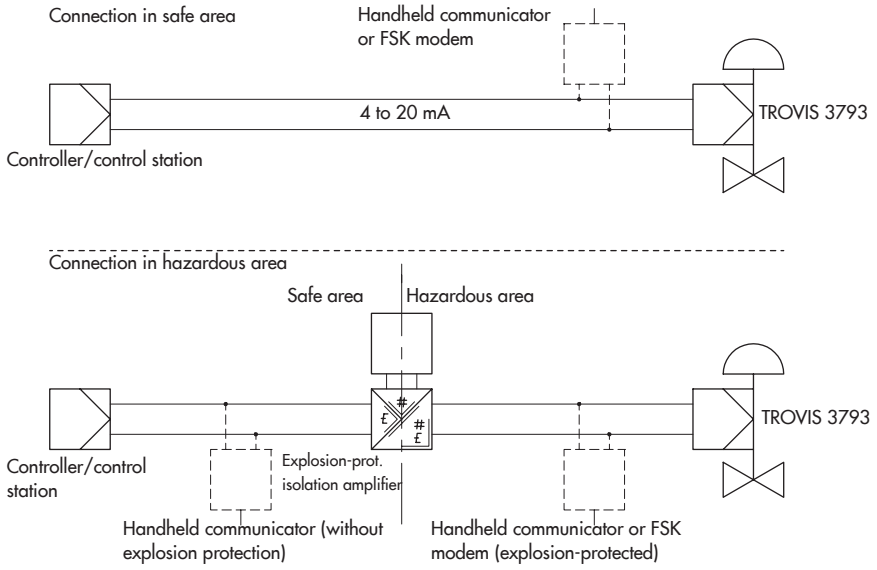

Fig. 5-35: *Connection with FSK modem*

Table 5-6: *Slot position and terminal assignment of the option modules*

Z3799-xxx10 [N] · Software limit switches and binary output (NAMUR)

Slot	Terminal assignment
C or D	

Description	Terminal	
Software limit switch (NAMUR 1)	N	+45
		–46
Software limit switch (NAMUR 2)	N	+55
		–56
Binary output (NAMUR)	N	+83
		–84

Z3799-xxx11 [X] · Software limit switches and binary output (PLC)

Slot	Terminal assignment
C or D	

Description	Terminal	
Software limit switch (PLC 1)	X	+91
		–92
Software limit switch (PLC 2)	X	+93
		–94
Binary output (PLC)	X	+95
		–96

Z3799-xxx14 [P] · Inductive limit switches and binary output (NAMUR)

Slot	Terminal assignment
D	

NOTICE!
Do not insert the module into slot C. The option module will be damaged.

Description	Terminal	
Binary output (NAMUR)	P	+83
		–84
Inductive limit switch 1	P	+41
		–42
Inductive limit switch 2	P	+51
		–52

Z3799-xxx21 [F] · Inductive limit switches and forced venting

Slot	Terminal assignment
D	

NOTICE!
Do not insert the module into slot C. The option module will be damaged. Set switch for forced venting function accordingly (see Chapter 5.2.4).

Description	Terminal	
Forced venting	M	+81
		–82
Inductive limit switch 1	M	+41
		–42
Inductive limit switch 2	M	+51
		–52

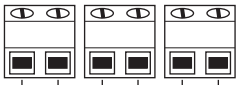

Z3799-xxx30 [M] · Mechanical limit switches

Slot	Terminal assignment
D	

NOTICE!
Do not insert the module into slot C. The option module will be damaged.

Description	Switching function		Terminal	
Mechanical limit switch 1 (changeover contact)	NC	NC contact	M	47
	C	Contact		48
	NO	NO contact		49
Mechanical limit switch 2 (changeover contact)	NC	NC contact	M	57
	C	Contact		58
	NO	NO contact		59

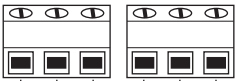

Z3799-xxx40 [T] · Position transmitter, binary input (24 V) and binary output (NAMUR)

Slot	Terminal assignment
C or D	

Description	Terminal	
Position transmitter 4 to 20 mA	T	+31
		–32
Binary input 24 V	T	+87
		–88
Binary output (NAMUR)	T	+83
		–84

Z3799-xxx50 [E] · External position sensor I

Slot	Terminal assignment
D	

NOTICE!
Do not insert the module into slot C. The option module will be damaged.

Description	Terminal		Color
Shunt terminal (jumpered)	E	N	
		N	
External position sensor	E	21	Blue
		22	Brown
		23	White
		24	Black

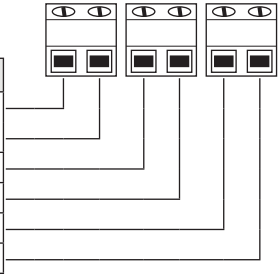

Z3799-xxx60 [Y] · External position sensor II (4 to 20 mA) and binary output (NAMUR)

Slot	Terminal assignment
D	

NOTICE!
Do not insert the module into slot C. The option module will be damaged.

Description	Terminal	
External position sensor (4 to 20 mA)	Y	+15
		–16
Shunt terminal (jumpered)	Y	N
		N
Binary output (NAMUR)	Y	+83
		–84

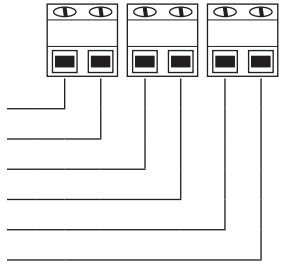

Z3799-xxx65 [U] · Binary input (contact), binary input (24 V) and binary output (NAMUR)

Slot	Terminal assignment
C or D	

Description	Terminal	
Binary input contact	N	85
		86
Binary input 24 V	N	+87
		–88
Binary output (NAMUR)	N	+83
		–84

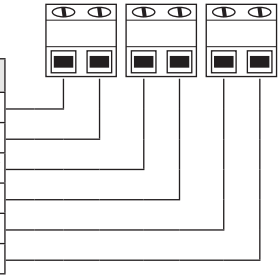

Z3799-xxx80 [V] · Forced venting, binary input (24 V) and binary output (NAMUR)

Slot	Terminal assignment
C or D **NOTICE!** Set switch for forced venting function accordingly (see Chapter 5.2.4).	

Description	Terminal	
Forced venting	V	+81 –82
Binary input 24 V	V	+87 –88
Binary output (NAMUR)	V	+83 –84

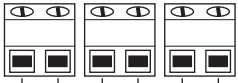

Z3799-xxx90 [A] · Analog input and binary output (NAMUR)

Slot	Terminal assignment
C or D	

Description	Terminal	
Analog input 4 to 20 mA	A	+17 –18
Shunt terminal (jumpered)	A	N N
Binary output (NAMUR)	A	+83 –84

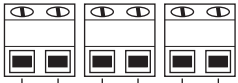

5.7 Mounting accessories

Table 5-7: *General accessories*

Designation		Order no.
Aluminum dummy plate for pneumatic connections Stainless steel dummy plate for pneumatic connections		1402-1079 1402-1438
M20x1.5 cable gland	Black plastic (6 to 12 mm clamping range)	8808-1011
	Blue plastic (6 to 12 mm clamping range)	8808-1012
	Nickel-plated brass (6 to 12 mm clamping range)	1890-4875
	Nickel-plated brass (10 to 14 mm clamping range)	1992-8395
	Stainless steel 1.4305 (8 to 14.5 mm clamping range)	8808-0160
Adapter M20x1.5 to ½ NPT	Powder-coated aluminum	0310-2149
	Stainless steel	1400-7114
M lever		0510-0510
L lever		0510-0511
XL lever		0510-0512
XXL lever		0510-0525
TROVIS-VIEW 6661 (download available: ▶ www.samsongroup.com > Downloads > Software & Drivers > TROVIS-VIEW)		
Isolated USB interface adapter (SAMSON SSP interface to USB port on a computer)		1400-9740
Set of spare parts, consisting of: 2x Molded seal for pneumatic interface 4x Filter 2x Cover hinge clip		1402-1582

Table 5-8: *Direct attachment to Type 3277 Actuator*

Mounting parts/accessories		Order no.
Standard mounting kit for direct attachment to actuators (240, 350, 355, 700, 750 cm²)		100184391
Connection block with seals and screw	G ¼	1400-8819
	¼ NPT	1402-0901
Pressure gauge mounting kit up to max. 6 bar	Stainless steel/brass	1402-1637
	Stainless steel/stainless steel	1402-1638
Piping with screw fittings [1]		**Order no.**
Actuator (240 cm²), steel	G ¼/G ⅜	1400-6444
	¼ NPT/⅜ NPT	1402-0911
Actuator (240 cm²), stainless steel	G ¼/G ⅜	1400-6445
	¼ NPT/⅜ NPT	1402-0912
Actuator (350 cm²), steel	G ¼/G ⅜	1400-6446
	¼ NPT/⅜ NPT	1402-0913
Actuator (350 cm²), stainless steel	G ¼/G ⅜	1400-6447
	¼ NPT/⅜ NPT	1402-0914
Actuator (355 cm²), steel	G ¼/G ⅜	1402-0972
	¼ NPT/⅜ NPT	1402-0979
Actuator (355 cm²), stainless steel	G ¼/G ⅜	1402-0973
	¼ NPT/⅜ NPT	1402-0980
Actuator (700 cm²), steel	G ¼/G ⅜	1400-6448
	¼ NPT/⅜ NPT	1402-0915
Actuator (700 cm²), stainless steel	G ¼/G ⅜	1400-6449
	¼ NPT/⅜ NPT	1402-0916
Actuator (750 cm²), steel	G ¼/G ⅜	1402-0974
	¼ NPT/⅜ NPT	1402-0981
Actuator (750 cm²), stainless steel	G ¼/G ⅜	1402-0975
	¼ NPT/⅜ NPT	1402-0982

[1] For "actuator stem retracts" direction of action;
with air purging of the top diaphragm chamber;
air purging of the spring chamber for "actuator stem extends" direction of action

Table 5-9: *Attachment to NAMUR rib or attachment to rod-type yokes [1] according to IEC 60534-6*

Travel in mm	Lever	For actuator	Order no.
5 to 50	M[2]	Actuators from other manufacturers and Type 3271 (240 to 750 cm²)	1400-7454
14 to 100	L	Actuators from other manufacturers and Type 3271 (1000 and 1400-60 cm²)	1400-7455
30 or 60	L	Type 3271 (1400-120 and 2800 cm² with 30/60 mm travel)	1400-7466
		Mounting brackets for Emerson and Masoneilan linear actuators (in addition, a mounting kit according to IEC 60534-6 is required depending on the travel). See rows above.	1400-6771
		Valtek Type 25/50	1400-9554
40 to 200	XL	Actuators from other manufacturers and Type 3271 (1400-120 and 2800 cm² with 120 mm travel)	1400-7456
60 to 300	XXL	Actuators from other manufacturers and Type 3271 (1400-250 with 250 mm travel)	1402-0806

Accessories		Order no.
Connecting plate, aluminum	G ¼	1402-1434
	¼ NPT	1402-1435
Connecting plate, stainless steel	G ¼	1402-1436
	¼ NPT	1402-1437
Pressure gauge bracket, two pressure gauges, aluminum	G ¼	1402-1599
	¼ NPT	1402-1600
Pressure gauge bracket, two pressure gauges, stainless steel	G ¼	1402-1601
	¼ NPT	1402-1602
Pressure gauge bracket, three pressure gauges, aluminum	G ¼	1402-1578
	¼ NPT	1402-1579
Pressure gauge bracket, three pressure gauges, stainless steel	G ¼	1402-1580
	¼ NPT	1402-1581
Pressure gauge mounting kit, with two pressure gauges up to 6 bar	Stainless steel/brass	1402-1637
	Stainless steel/stainless steel	1402-1638
Pressure gauge mounting kit, with two pressure gauges up to 10 bar		1402-1583
Pressure gauge mounting kit, with three pressure gauges up to 10 bar		1402-1528

1) 20 to 35 mm rod diameter
2) M lever is mounted on basic device (included in the scope of delivery)

Table 5-10: *Attachment according to VDI/VDE 3847-1*

Mounting parts	Order no.
Interface adapter [1] VDI/VDE 3847 for TROVIS 3793	1402-1527
Pressure gauge mounting kit, with three pressure gauges up to 10 bar	1402-1528
Mounting kit for attachment to SAMSON Type 3277 Actuator with 240 to 750 cm²	1402-0868
Mounting kit for attachment to SAMSON Type 3271 Actuator or third-party actuators	1402-0869
Travel pick-off for valve travel up to 100 mm	1402-0177
Travel pick-off for 100 to 200 mm valve travel (SAMSON Type 3271 Actuator only)	1402-0178

[1] Alternatively, the interface adapter (1402-0257) for Series 3730 Positioners can be used for mounting the TROVIS 3793 Positioner. The following restrictions apply on using it:
- Air purging of the actuator's spring chamber is not possible.
- Only single-acting function can be implemented.
- The top outputs (79 and 238, see Chapter 5.5) must be sealed with the dummy plate.

Table 5-11: *Attachment according to VDI/VDE 3847-2*

Designation			Order no.
Mounting parts	Mounting block for PFEIFFER Type 31a (edition 2020+) Rotary Actuators with blank plate for solenoid valve interface	Standard	1402-1645
		Made of Ematal	100049269
	Dummy plate for solenoid valve interface (sold individually)		1402-1290
	Adapter bracket (VDI/VDE 3847)		1402-1527
Accessories for actuator	Shaft adapter AA1		1402-1617
	Shaft adapter AA2		1402-1616
	Shaft adapter AA4		1402-1888

Table 5-12: *Attachment of external position sensor I (SAMSON)*

Designation				Order no.
Direct attachment	Mounting parts for actuators with 240 to 750 cm² actuator area			1400-7471
NAMUR attachment	Mounting parts for attachment to NAMUR rib using L or XL lever			1400-7468
Attachment to rotary actuators	VDI/VDE 3845 (September 2010)			
		Actuator surface corresponds to fixing level 1		
			Size AA1 to AA4 with follower clamp and coupling wheel, version with CrNiMo steel bracket	1400-7473
			Size AA1 to AA4, heavy-duty version	1400-9384
			Size AA5, heavy-duty version (e.g. AIR TORQUE 10 000)	1400-9992
		Bracket surface corresponds to fixing level 2, heavy-duty version		1400-9974
	SAMSON Type 3278 (160 cm²) and VETEC Type S160 and Type R, heavy-duty version			1400-9385
	SAMSON Type 3278 (320 cm²) and VETEC Type S320, heavy-duty version			1400-5891 and 1400-9974
Bracket to mount the positioner on a wall (**Note:** The other fastening parts are to be provided at the site of installation as wall foundations vary from site to site).				0309-0184
Bag of accessories including flanged connector				100058171
10 m connecting cable, 4-pole				100067590

Table 5-13: *Attachment to rotary actuators*

Mounting parts/accessories			Order no.
Attachment according to VDI/VDE 3845 (September 2010), actuator surface corresponds to fixing level 1			
	Size AA1 to AA4, heavy-duty version		1400-9244
	Size AA1 to AA4, heavy-duty version, stainless steel (316)		1402-1592
	Size AA5, heavy-duty version (e.g. AIR TORQUE 10 000)		1400-9542
	Bracket surface corresponds to fixing level 2, heavy-duty version		1400-9526
Attachment to SAMSON Type 3278 (160 cm²) and to VETEC Type S160, Type R and Type M, heavy-duty version			1400-9245
Attachment to SAMSON Type 3278 (320 cm²) and to VETEC Type S320, heavy-duty version			1400-5891 and 1400-9526
Attachment to Camflex II			1400-9120
Accessories	Connecting plate, aluminum	G ¼	1402-1434
		¼ NPT	1402-1435
	Connecting plate, stainless steel	G ¼	1402-1436
		¼ NPT	1402-1437
	Pressure gauge bracket, two pressure gauges, aluminum	G ¼	1402-1599
		¼ NPT	1402-1600
	Pressure gauge bracket, two pressure gauges, stainless steel	G ¼	1402-1601
		¼ NPT	1402-1602
	Pressure gauge bracket, three pressure gauges, aluminum	G ¼	1402-1578
		¼ NPT	1402-1579
	Pressure gauge bracket, three pressure gauges, stainless steel	G ¼	1402-1580
		¼ NPT	1402-1581
	Pressure gauge mounting kit, with two pressure gauges up to 6 bar	Stainless steel/brass	1402-1637
		Stainless steel/stainless steel	1402-1638
	Pressure gauge mounting kit, with two pressure gauges up to 10 bar		1402-1583
	Pressure gauge mounting kit, with three pressure gauges up to 10 bar		1402-1528

6 Operation

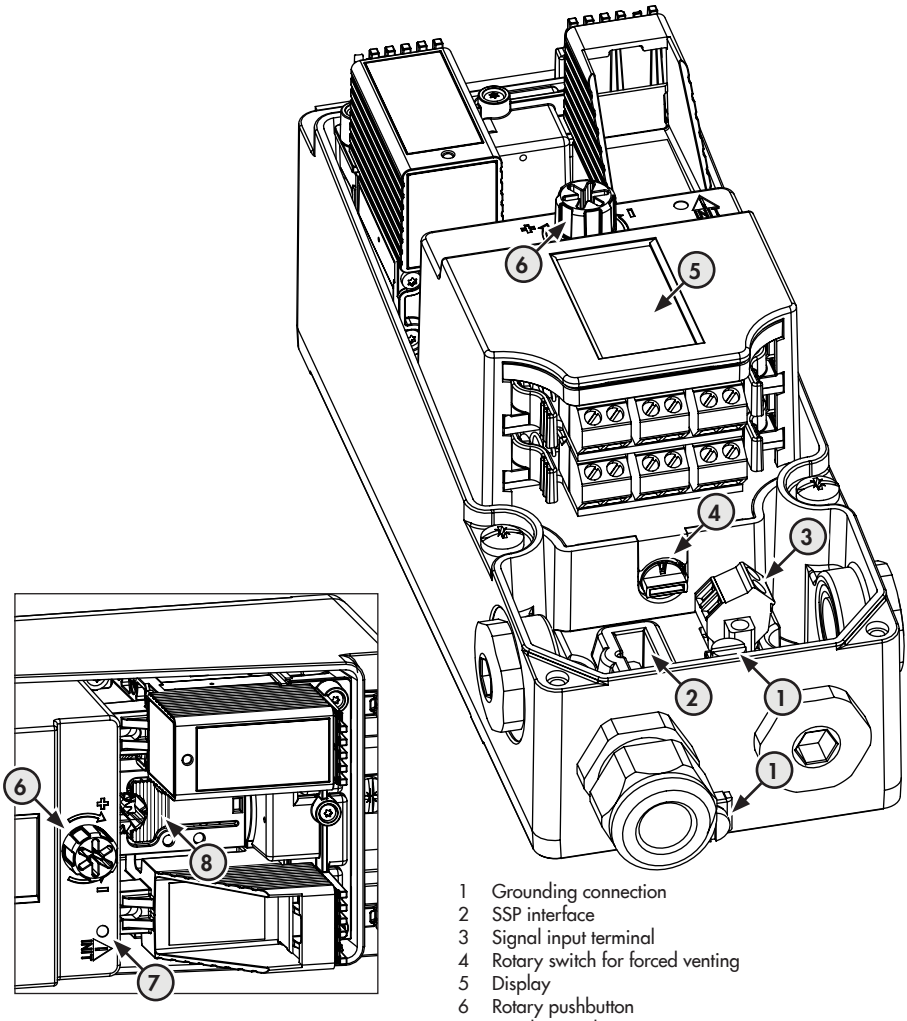

1 Grounding connection
2 SSP interface
3 Signal input terminal
4 Rotary switch for forced venting
5 Display
6 Rotary pushbutton
7 Initialization key (INIT)
8 Shaft locking

Fig. 6-1: *Operating controls*

6.1 Rotary pushbutton

The rotary pushbutton for on-site operation is located next to the display (right or left, depending on the mounting position).

Turn: select menu item, parameters or values.

Press: confirm selection.

Keep pressed down for two seconds: return to menu level (***ESC*** with progress bar appears).

6.2 Initialization key (INIT)

⚠ WARNING

Crush hazard arising from actuator and plug stem moving.

➔ *Do not insert hands or finger into the yoke while the air supply is connected to the positioner.*

➔ *Do not impede the movement of the actuator and plug stem by inserting objects into the yoke.*

NOTICE

The process is disturbed by the movement of the actuator or valve.

Do not perform the initialization while the process is running. First isolate the plant by closing the shut-off valves.

For normal operation, simply start initialization by pressing the INIT key after mounting the positioner on the valve. In this case, the initialization is performed using the MAX initialization mode with ATO fail-safe position (see the 'Start-up and configuration' chapter). Additionally, the default settings in the parameter list (see configuration instructions in Appendix A) apply.

Proceed as follows for fast initialization:

1. Mount the positioner on the valve.
2. Connect the supply air.
3. Connect the electrical power.

➔ During the first start-up, the wizard is displayed.

4. Use a thin object to press the initialization key (INIT).

6.3 Switch for forced venting

➔ See the 'Installation' chapter.

6.4 Display

i Note

The display's operating range is from –30 to +65 °C. The readability of the display is restricted outside this temperature range.

As soon as the electrical power (mA control signal) is connected, the wizard is displayed during the first start-up and, in all other cases, the main display (Fig. 6-2, left) appears, which is marked by the reading number 0.1 to 0.99 (at the top right-hand corner of the display). Displayed icons provide information on the operating mode, status etc. (see Chapter 6.4.2). Press the ⊛ key to go from the main display to the menu level (Fig. 6-2, right). All settings can be made and functions executed in the menu level. The 'Start-up and configuration' chapter contains a description of the basic start-up settings. A list of the menu structure and parameters for on-site operation is included in Appendix A (configuration instructions).

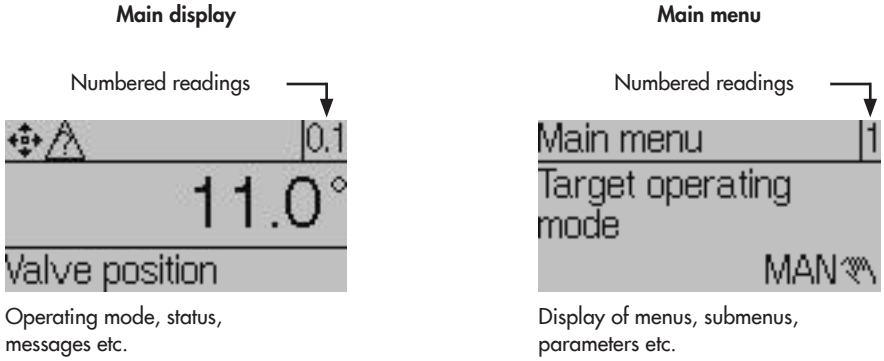

Fig. 6-2: *Main display and main menu of the TROVIS 3793 Positioner*

➔ Turn ⊛ clockwise to scroll through from reading 0.1 to 0.99. Readings 0.0 to 0.99 are hidden or shown depending on the positioner's operating mode, configuration, status etc.

➔ Press ⊛ to go from the **main display** to the **menu level**.

6.4.1 Menu structure

The following menu structure contains the parameters and main folders. The folders are named correspondingly. The readings shown for individual parameters and folders depend on the state of the positioner (initialized or not yet initialized) and hardware and software configuration of the positioner (e.g. installed pneumatic and option modules, parameter settings). Appendix A (configuration instructions) contains a full list of all parameters that can appear on the display.

Main display

- 0.1 Valve position in degrees
- 0.2 Valve position in %
- 0.12 Set point in %
- 0.15 Set point deviation in %
- 0.20 Supply pressure in bar
- 0.30 Status of pneumatic module in slot A [1)]
- 0.35 Status of pneumatic module in slot B [1)]
- 0.40 Status of Z3799 C (option module in slot C) [1)]
- 0.45 Status of Z3799 D (option module in slot D) [1)]
- 0.50 Messages [2)]
- 0.99 Press ⊛ to go the main menu.

Main menu

- 1 Target operating mode
- 2 Set point (open-loop control)
- 3 Manual set point (MAN)
- 4 Reason for fail-safe position

- 5 Change reading direction
- 6 User level
- 7 Start-up **(folder)**
  - 7.95 Valid initialization **(folder)**
- 8 Configuration **(folder)**
  - 8.1 Set point processing **(folder)**
  - 8.2 Identification **(folder)**
  - 8.7 Control parameters **(folder)**
  - 8.10 Slot options **(folder)**
    - 8.10.22 Option C.1 **(folder)**
    - 8.10.23 Option C.2 **(folder)**
    - 8.10.24 Option C.3 **(folder)**
    - 8.10.32 Option D.1 **(folder)**
    - 8.10.33 Option D.2 **(folder)**
    - 8.10.34 Option D.3 **(folder)**
  - 8.20 HART communication **(folder)**
- 10 Process data **(folder)**
- 12 Diagnosis/maintenance **(folder)**
  - 12.1 Configuration **(folder)**
  - 12.3 Device state **(folder)**
  - 12.5 Statistical information **(folder)**
  - 12.8 Test functions **(folder)**
- 14 Reset functions **(folder)**
- 16 Wizard

1) Reading only in the event of an error
2) Some of the messages can be confirmed: in this case, select the message and press ⊛ (only possible when the configuration is enabled, see the 'Start-up and configuration' chapter).

6.4.2 Display icons

Table 6-1: *Operating modes*

Icon	Operating mode	Description
	Automatic mode	The positioner is in closed-loop operation and follows the mA signal.
	Manual mode	The positioner follows the manual set point instead of the mA signal.
	SAFE (fail-safe position)	The pneumatic outputs of the positioner are either vented or supplied with air depending on the combination of the pneumatic modules.
	Open-loop control mode [1]	The open-loop control mode allows the valve position to be adjusted manually (even when the positioner has not been initialized).
	Function mode	The positioner is being initialized or a test is in progress.

[1] The open-loop control mode cannot be directly selected. It acts the same as the manual mode when the positioner has not yet been initialized.

Table 6-2: *NAMUR status according to NE 107*

Icon	Meaning
	Failure
	Function check
	Out of specification
	Maintenance demanded
	OK (no message)

Table 6-3: *Other icons*

Icon	Meaning
	Write protection
	Option module in slot C
	Option module in slot D
	Binary contact 1 active
	Binary contact 2 active
	Binary contact 3 active

6.4.3 Changing the display's reading direction

The reading direction of the display can be adapted to the mounting situation (turned 180°) at any time.

1. Press ⊛ (in start screen) to go to the main menu.
2. Turn ⊛ until 'Change reading direction [5]' appears.
3. Press ⊛ to change reading direction.

6.5 HART® communication

Conditions for HART® communication:

➔ Supply the positioner with at least 3.6 mA.

➔ Connect the FSK modem in parallel to the current loop.

A DTM file (Device Type Manager) conforming to the Specification 1.2 is available for communication. This allows the device, for example to be run with the PACTware user interface (see the 'Start-up and configuration' chapter). All the positioner's parameters are accessible over the DTM and the user interface.

---

i Note

*If complex functions are started in the positioner, which require a long calculation time or lead to a large quantity of data being saved in the volatile memory of the positioner, the alert 'busy' is issued by the DTM file. This alert is **not an error message** and can be simply confirmed.*

Locking HART® communication

The write access for HART® communication can be locked. This function can be enabled or disabled locally at the positioner (**Configuration [8]/HART communication [8.3]/Locked [8.3.1]**) (setting options: Yes/No, default setting: No, see parameter list in Appendix A (configuration instructions).

Locking on-site operation

The on-site operation can be locked over HART® communication. This locking function can only be disabled over HART® communication. On-site operation is enabled by default.

Note

The access over TROVIS-VIEW is also locked through the locking of on-site operation over HART® communication.

6.5.1 Dynamic HART® variables

The HART® specification defines four dynamic variables consisting of a value and an engineering unit. These variables can be assigned to device parameters as required. The universal HART® command 3 reads the dynamic variables out of the device. This allows manufacturer-specific parameters to also be transferred using a universal command.

In the TROVIS 3793 Positioner, the dynamic variables can be assigned as follows in the Configuration folder (> HART communication):

Table 6-4: *Dynamic HART® variables assignment*

Variable	Unit, description
Set point at the input	%
Valve position	%
Set point deviation	%
Status messages	Current state active/not active
Slot C.1: binary input	Current state active/not active
Slot D.1: binary input	Current state active/not active
Slot C.2: binary input	Current state active/not active
Slot D.2: binary input	Current state active/not active
Slot C.3: binary input	Current state active/not active
Slot D.3: binary input	Current state active/not active
Total valve travel	Current total valve travel
Results of PST	Not executed/successful/test-specific error message
Results of FST	Not executed/successful/test-specific error message
Discrete valve position	Positioner not initialized, Closed, Open, Intermediate position
Supply pressure	bar
Current temperature	Reading of current temperature

Variable	Unit, description
Pressure at output 138	bar
Pressure at output 238	bar
Structure-borne sound level	dB
4 to 20 mA input of the option module A	%
4 to 20 mA input of the option module B	%

Note

Refer to the Configuration Manual ▶ KH 8384-3 for more details.

7 Start-up and configuration

The work described in this chapter is only to be performed by personnel appropriately qualified to carry out such tasks.

⚠ WARNING

Crush hazard arising from actuator and plug stem moving.

➔ *Do not insert hands or finger into the yoke while the air supply is connected to the positioner.*

➔ *Do not impede the movement of the actuator and plug stem by inserting objects into the yoke.*

Before start-up, make sure the following conditions are met:

– The positioner is properly mounted according to the instructions.

– The pneumatic and electrical connections are performed according to the instructions.

After the positioner is put into operation for the first time after shipment, the wizard starts automatically after the electrical power is connected. It assists users to set the display's reading direction and the menu language (English upon first start-up). The reading direction of the display depends on the mounting position (position of the pneumatic modules, right or left of the display).

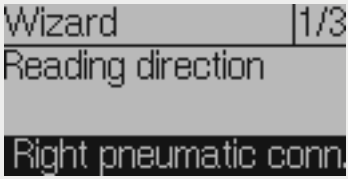

1. Turn ⊛: determine the reading direction of the display (mounting position with pneumatic modules on the right or left of the display).
2. Press ⊛ twice: confirm reading direction.
3. Turn ⊛: select language.
4. Press ⊛ three times: confirm language.

➔ Afterwards, the display automatically changes to the main display.

➔ When **ESC** is selected in the wizard, you can navigate through the displays of the wizard 1/3 (mounting position), 2/3 (language) and 3/3 (exit wizard) by selecting forward **(>)** and back **(<)**.

➔ If no settings are entered within five minutes, the positioner automatically returns to the main display.

Sequence for start-up:

Action	Chapter
1. Enable configuration.	7.1
2. Set start-up parameters: Actuator type, pin position, initialization mode, fail-safe position, pneumatic primary output, software restriction, 'External position sensor' function	7.2
3. Initialize the positioner.	7.3
4. Configure option modules.	7.4

7.1 Enabling configuration

The 🔒 icon indicates that configuration has not yet been enabled.

1. Press ⊛ (in start screen) to go to the main menu.
2. Turn ⊛ until 'User level [6]' appears.
3. Press and turn ⊛ until 'On-site: write' appears.
4. Press ⊛ to confirm.
5. Keep ⊛ pressed down for two seconds to return to the start screen.

➔ Configuration is enabled when the 🔒 icon is no longer visible on the display.

Configuration is locked again if no settings are entered within 5 minutes.

7.2 Setting start-up parameters

The start-up parameters listed in this chapter are set in the 'Start-up' menu. To access the 'Start-up' menu, proceed as follows:

1. Enable configuration as described in Chapter 7.1.
2. Press ⊛ (in start screen) to go to the main menu.
3. Turn ⊛ until 'Start-up [7]' appears.
4. Press ⊛ to go to the 'Start-up' menu.

7.2.1 Actuator type

Three different parameters are available for selection:

– Linear actuator
– Rotary actuator
– Linear actuator (expert) with separate setting options for pin position and nominal range

1. Turn ⊛ (within 'Start-up [7]' menu) until 'Actuator [7.1]' appears.
2. Press and turn ⊛ to set the actuator type.
3. Press ⊛ to confirm the setting.

7.2.2 Pin position

The setting options depend on the entered actuator type:

– For linear actuator: 'Pin position [7.2]: 'None', 17, 25, 35, 50, 70, 100, 200 or 300 mm
– For rotary actuator: 'Pin position [7.3]': 90° and 'No lever'
– For linear actuator (expert): 'Pin position [7.4]: 10 to 655 mm

1. Turn ⊛ (within 'Start-up [7]' menu) until 'Pin position [7.2/7.3/7.4]' appears.
2. Press and turn ⊛ to enter the pin position to match how the actuator is mounted.
3. Press ⊛ to confirm the setting.

i Note

*A pin position needs to be entered for the **NOM** and **SUB** initialization modes. See Chapter 7.2.4.*

7.2.3 Nominal range

The possible adjustment range depends on the entered pin position.

1. Turn ⊛ (within 'Start-up [7]' menu) until 'Nominal range [7.10/7.11/7.12]' appears.
2. Press and turn ⊛ to set the nominal range.
3. Press ⊛ to confirm the setting.

i Note

If no pin position has been entered, 'Nominal range' is only available for the 'Linear actuator (expert)' actuator type.

7.2.4 Initialization mode

During initialization the positioner adapts itself optimally to the friction conditions and the signal pressure required by the control valve. The type and extent of autotuning depends on the initialization mode selected. The following initialization modes are available:

***MAX*: Maximum range**
The positioner determines travel/angle of rotation of the closing member from the closed position to the opposite travel stop and adopts this travel/angle of rotation as the operating range from 0 to 100 %.

***NOM*: Nominal range · Initialization mode for all globe valves**
The calibrated sensor allows the exact valve travel to be measured very accurately. During initialization, the positioner checks whether the control valve can move through the indicated nominal range (travel or angle) without collision. If this is the case, the indicated nominal range is adopted as the operating range.

***MAN*: Manually selected end positions · Initialization mode for globe valves**
Before starting initialization, move the control valve manually to the end positions. The positioner calculates the travel/angle difference from the two positions that the valve moved to and adopts it as the operating range. This initialization mode can only be started when the valve position differs in the end positions and the positioner has not yet been initialized.

***SUB*: Substitute calibration · To replace a positioner while the plant is running**

A complete initialization procedure takes several minutes and requires the valve to move through its entire travel range several times. In the SUB initialization mode, the control parameters are estimated and not determined by an initialization procedure. As a result, a high level of accuracy cannot be expected. A different initialization mode should be selected if the plant allows it.

The substitute calibration is used to replace a positioner while the process is running. For this purpose, the control valve is usually blocked mechanically in a certain position or pneumatically by means of a pressure signal which is routed to the actuator externally. The blocking position ensures that the plant continues to operate with this valve position. The blocking position can also be the fail-safe position when this condition is beneficial for the temporary phase.

Perform a reset before re-initializing the positioner if the substitute positioner has already been initialized (see the 'Operation' chapter).

Setting the *MAX* and *NOM* initialization modes:

1. Turn ⊛ (within 'Start-up [7]' menu) until 'Initialization mode [7.24]' appears.
2. Press and turn ⊛ to set the **MAX** or **NOM** initialization mode.
3. Press ⊛ to confirm the setting.

i ***Note***

*A pin position needs to be entered for the **NOM** initialization mode.*

Setting the *MAN* initialization mode

i ***Note***

*The **MAN** initialization mode can only be started when the valve position differs in the end positions and the positioner has not yet been initialized.*

1. Turn ⊛ (within 'Start-up [7]' menu) until 'Initialization mode [7.24]' appears.
2. Press and turn ⊛ to set the **MAN** initialization mode.
3. Press ⊛ to confirm the setting.
4. Turn ⊛ until 'Set point (open-loop control) [7.28]' appears.

5. Press and turn ⊛ to move the valve to the first end position. Enter a value from –90 to 90°.
6. Press ⊛ to confirm the value (first end position).
7. Turn ⊛ until 'Adopt valve position 1 [7.29]' appears.
8. Press ⊛ to confirm the entered first valve position as valve position 1.
9. Turn ⊛ until 'Set point (open-loop control) [7.28]' appears.
10. Press and turn ⊛ to move the valve to the second end position. Enter a value from –90 to 90°.
11. Press ⊛ to confirm the value (second end position).
12. Turn ⊛ until 'Adopt valve position 2 [7.31]' appears.
13. Press ⊛ to confirm the entered second valve position as valve position 2.

Setting the *SUB* initialization mode:

i ***Note***

*The **SUB** initialization mode is a substitute calibration, which can be selected to replace a positioner while the process is running. In this mode, the control parameters are estimated and not determined by an initialization procedure. As a result, a high level of accuracy cannot be expected. A different initialization mode should be selected if the plant allows it.*
*The **SUB** initialization mode can only be started when the positioner has not yet been initialized.*

1. Write down the current valve position in %.
2. Turn ⊛ (within 'Start-up [7]' menu) until 'Initialization mode [7.24]' appears.
3. Press and turn ⊛ to set the **SUB** initialization mode.
4. Press ⊛ to confirm the setting.
5. Turn ⊛ until 'Pin position [7.2/7.3/7.4]' appears.
6. Press and turn ⊛ to enter the pin position to match how the actuator is mounted.
7. Press ⊛ to confirm the setting.

8. Turn ⊛ until 'Nominal range [7.10/7.11/7.12]' appears.
9. Press and turn ⊛ to set the actuator's nominal range.
10. Press ⊛ to confirm the setting.
11. Turn ⊛ until 'Current valve position [7.35]' appears.
12. Press and turn ⊛ to set the current valve position in % (see step 1), at which the valve is currently blocked.
13. Turn ⊛ until 'Direction of rotation [7.36]' appears.
14. Press and turn ⊛ to set the direction of rotation so that the lever's direction of rotation matches the valve's closing direction.

    Example:
    The valve closes when the plug stem moves downward. This action causes the positioner's lever to turn counterclockwise (when looking at the display, the pneumatic module on the right).

➔ Setting: Counterclockwise

i Note

After performing the SUB initialization, the control parameters can be changed ('Configuration [8]'/'Control parameters [8.4]', see Appendix A).

7.2.5 Fail-safe action

Define the fail-safe position of the valve taking the valve type and the actuator's direction of action into account:

Fail-safe position	Description
AIR TO OPEN	Signal pressure opens the valve, e.g. for a fail-close valve The AIR TO OPEN setting always applies to double-acting actuators.
AIR TO CLOSE	Signal pressure closes the valve, e.g. for a fail-open valve

1. Turn ⊛ (within 'Start-up [7]' menu) until 'Fail-safe position [7.20]' appears.
2. Press ⊛ and turn it to set the fail-safe position AIR TO OPEN or AIR TO CLOSE.
3. Press ⊛ to confirm the setting.

For checking purposes: after initialization is completed, the positioner display must read 0 % when the valve is closed.

7.2.6 Pneumatic primary output

Which pneumatic signal on which the diagnostics or valve signature is to be based upon must be defined. OUTPUT 138 is set by default.

1. Turn ⊛ (within 'Start-up [7]' menu) until 'Output P3799 (primary) [7.53]' appears.
2. Press and turn ⊛ to assign 'OUTPUT 138' or 'OUTPUT 238'.
3. Press ⊛ to confirm the setting.

7.2.7 Software restriction

Note

The positioner must be re-initialized if the software restriction settings are changed after initialization.

Tip

We recommend setting the software restriction for supply and exhaust to a value of 50 % for actuators with diaphragm areas ≤ 240 cm².

Positioner with pneumatic module combination P3799-0001 and P3799-0000 or pneumatic module combination P3799-0003 and P3799-0004

If the pneumatic module combination P3799-0001 and P3799-0000 or pneumatic module combination P3799-0003 and P3799-0004 is installed in the positioner, the software restriction automatically adapts the air capacity to the actuator size during initialization.

Note

The automatic software restriction setting must be deactivated when a pneumatic volume booster is mounted on the control valve.

If you want to set the software restriction manually, proceed as follows:

1. Turn ⊛ (within 'Start-up [7]' menu) until 'Automatic software restriction setting [7.62]' appears.
2. Press and turn ⊛ to set 'Not active'.
3. Press ⊛ to confirm the setting.
4. Turn ⊛ until 'Software restriction (supply) [7.64]' appears.
5. Press and turn ⊛ to set the value (25 to 100 %).
6. Press ⊛ to confirm the setting.
7. Turn ⊛ until 'Software restriction (exhaust) [7.65]' appears.
8. Press and turn ⊛ to set the value (25 to 100 %).
9. Press ⊛ to confirm the setting.

Positioner with two pneumatic modules P3799-0001

If the pneumatic module combination P3799-0001 and P3799-0001 is installed in the positioner, no automatic adaptation by the software restriction takes place. The control response to small step changes can be corrected by manually adjusting the software restriction after initialization. To do this, proceed as follows:

1. Turn ⊛ (within 'Configuration [8]' menu) until 'Software restriction (supply) [8.7.30]' appears.
2. Press and turn ⊛ to set the value (25 to 100 %).
3. Press ⊛ to confirm the setting.
4. Turn ⊛ until 'Software restriction (exhaust) [8.7.32]' appears.
5. Press and turn ⊛ to set the value (25 to 100 %).
6. Press ⊛ to confirm the setting.

If the air output capacity is generally too large for the actuator, remove the pneumatic module P3799-0001 at slot B and replace it with pneumatic module P3799-0000 (dummy module).

Positioner with pneumatic module combination P3799-0002 and P3799-0003

If the pneumatic module combination P3799-0002 and P3799-0003 is installed in the positioner, no automatic adaptation by the software restriction takes place. The control response to small step changes can be corrected by manually adjusting the software restriction after initialization. To do this, proceed as follows:

1. Turn ⊛ (within 'Configuration [8]' menu) until 'Software restriction (supply) [8.7.30]' appears.
2. Press and turn ⊛ to set the value (25 to 100 %).
3. Press ⊛ to confirm the setting.
4. Turn ⊛ until 'Software restriction (exhaust) [8.7.32]' appears.
5. Press and turn ⊛ to set the value (25 to 100 %).
6. Press ⊛ to confirm the setting.

If the air output capacity is generally too large for the actuator, change the hook-up. In case, after changing the hook-up, there are no longer any valve accessories (e.g. volume booster, quick exhaust valve) installed, change the pneumatic module combination to two P3799-0001 modules.

7.2.8 'External position sensor' function

i Note

This chapter only applies if the positioner is fitted with an external position sensor (option module [E] or [Y]).

➔ Set 'Position sensor' [8.10.40] parameter to 'External'.

7.3 Initializing the positioner

Once all settings have been made according to Chapter 7.2, the positioner initialization can be started.

NOTICE

The process is disturbed by the movement of the actuator or valve.

➔ *Do not perform the initialization while the process is running. First isolate the plant by closing the shut-off valves.*

Note

The initialization can only be started over the menu after configuration has been enabled.

When the positioner is fitted with pressure sensors, a valve signature can be recorded automatically after initialization is completed. In this case, the signal pressure is recorded together with the valve position and saved in the positioner as a reference value.

More details on the valve signature can be found in the Operating Instructions ▶ EB 8389-2.

The function is activated by default. To change the 'Initialization with valve signature' setting, proceed as follows:

1. Turn ⊛ (within 'Start-up [7]' menu) until 'Init. with valve signature [7.68]' appears.
2. Press and turn ⊛ to select the 'Yes' or 'No'.
3. Press ⊛ to confirm the setting.

Start initialization:

1. Turn ⊛ (within 'Start-up [7]' menu) until 'Start initialization [7.75]' appears.
2. Press ⊛ to start initialization.
3. Confirm warning with OK.
4. Wait until the initialization process is completed.

After initialization, the positioner remains in the 'Start initialization [7.75]' menu item.

➔ Keep ⊛ pressed down for two seconds to return to the main menu.

➔ Keep ⊛ pressed down again for two seconds to return to the start screen.

The valve position appears in % on the display. The positioner is in the automatic mode (icon), the NAMUR status is OK (icon) and configuration is still enabled.

➔ **The positioner is ready for use.**

Tip

Initialization can also be started by pressing the initialization key (INIT).

7.4 Configuring option modules

➔ Set parameters of option modules:
- [8.10.22] to [8.10.24] for slot C, see Appendix A (configuration instructions)
- [8.10.32] to [8.10.34] for slot D, see Appendix A (configuration instructions)

➔ Perform other settings depending on the installed option module:
- Mechanical limit switches (option module [M]), see chapter 7.4.1
- External position sensor I and II (option module [E] and [Y]), see Chapter 7.2.8

7.4.1 Adjusting the switching points (when limit switches are used)

Note

This chapter only applies if the positioner is fitted with hardware limit switches (option module [P], [M] or [F]).

The switching points of the limit switches are usually adjusted so that a signal is issued in the travel/angle end positions. Optionally, the switching point can also be adjusted to any position within the travel/angle range, e.g. if an intermediate position is to be indicated.

Both switching points are adjusted at slotted-head screws on the top of the mechanical assembly (Fig. 7-1):

– Limit switch 1 (screw 1)
– Limit switch 2 (screw 2)

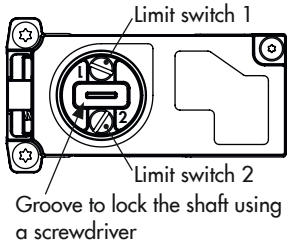

Fig. 7-1: *Adjusting the switching points*

1. Move the valve to the position at which the switching point is to be activated.
2. Adjust the switching points as follows:
   Mechanical limit switches:
   Turn the adjustment screw until the cam of cam disk reaches the roller of the microswitch and the output signal changes.

   Inductive limit switches:
   Turn the adjustment screw until the metal tag moves out of the magnetic field of the proximity sensor and the output signal changes.
3. Turn the adjustment screw in the opposite direction to compensate for the switching point shift due to temperature changes. Refer to the neighboring table to determine how many times the screw must be turned.

Switching point shift	
Opening angle	Travel
≤ 2°	≤ 0.8 mm
Turns of the adjustment screw	
1/16	1/16

4. Move the valve away from the switching position and check whether the output signal changes.
5. Move the valve back to the switching position and check the switching point.

8 Setup

The work described in this chapter is only to be performed by personnel appropriately qualified to carry out such tasks.

⚠ DANGER

Risk of fatal injury due to the ignition of an explosive atmosphere.

➔ *Observe EN 60079-14 (VDE 0165, Part 1) for work on the positioner in potentially explosive atmospheres.*

➔ *Work in potentially explosive atmospheres must only be performed by personnel who has undergone special training or instructions or who is authorized to work on explosion-protected devices in hazardous areas.*

⚠ WARNING

Crush hazard arising from actuator and plug stem moving.

➔ *Do not insert hands or finger into the yoke while the air supply is connected to the positioner.*

➔ *Before working on the positioner, disconnect and lock the pneumatic air supply.*

➔ *Do not impede the movement of the actuator and plug stem by inserting objects into the yoke.*

The positioner can be operated after mounting and start-up have been completed. After initialization, the positioner switches to closed-loop operation (automatic mode).

8.1 Changing the operating mode

The following operating modes can be set at the positioner:

– **Automatic mode:** the positioner is in closed-loop operation and follows the control signal (indicated by the icon).

– **Fail-safe position:** the pneumatic outputs of the positioner are either vented (exhaust) or supplied with air (supply) depending on the combination of the pneumatic modules (indicated by the S icon).

– **Manual mode:** the positioner follows the 'Manual set point [MAN 3]' instead of the control signal. Manual mode is indicated by the icon.

Setting the target operating mode:

1. Turn ⊛ (in start screen) until 'Target operating mode [1]' appears.
2. Press and turn ⊛ to select the target operating mode.
3. Press ⊛ to confirm the setting.

8.2 Performing zero calibration

In case of inconsistencies in the closed position of the valve, e.g. with soft-seated plugs, it might be necessary to recalibrate zero. During zero calibration, the valve moves once to the closed position.

NOTICE

The process is disturbed by the movement of the actuator or valve.

➔ *Do not perform the zero calibration while the process is running. First isolate the plant by closing the shut-off valves.*

Note

A zero calibration is not possible if there is zero point shift of more than 5 %.

1. Turn ⊛ (within 'Start-up [7]' menu) until 'Start zero calibration [7.76]' appears.
2. Press ⊛ to start zero calibration.
3. Confirm warning with OK.
4. Wait until zero calibration is completed.

After zero calibration, the positioner remains in the 'Start zero calibration [7.76]' menu item.

➔ Keep ⊛ pressed down for two seconds to return to the main menu.

➔ Keep ⊛ pressed down again for two seconds to return to the start screen.

8.3 Resetting the positioner

A reset allows the positioner to be reset to the default settings. The TROVIS 3793 Positioner has the following reset options:

Reset function	Description	Sample application
Reset diagnosis	Resets all diagnostic functions including graphs and histograms.	Diagnosis analyses of operating hours in the past are no longer relevant.
Reset (standard)	Resets the positioner to the state as upon delivery. Actuator and valve-specific settings remain unchanged.	Positioner has been repaired or modified. The diagnosis data are no longer relevant. The positioner must be re-initialized.
Reset (advanced)	All parameters will be reset to their defaults adjusted upon delivery.	Positioner is mounted on another actuator/valve.
Restart	The positioner is shut down and restarted.	Putting the valve back into operation after a malfunction
Reset initialization	All parameters for the start-up settings (see Appendix A (configuration instructions)) are reset. The positioner needs to be re-initialized afterwards.	Changes to the start-up settings are necessary.
Reset reports	Reset all reports and graphs/ diagrams generated by the partial stroke (PST) and full stroke (FST) tests.	The existing test results and assessments are no longer relevant.

1. Turn ⊛ (within main menu) until 'Reset functions [14]' appears.
2. Press ⊛ to go to the menu.
3. Turn ⊛ to select a reset function.
4. Press ⊛ to perform the reset function.
5. Confirm warning with OK.
6. Wait until the reset function is completed.

9 Malfunction

⚠ DANGER

Risk of fatal injury due to the ignition of an explosive atmosphere.

➔ *Observe EN 60079-14 (VDE 0165, Part 1) for work on the positioner in potentially explosive atmospheres.*

➔ *Work in potentially explosive atmospheres is to be performed only by personnel who has undergone special training or instructions or who is authorized to work on explosion-protected devices in hazardous areas.*

⚠ DANGER

Risk of bursting in the pneumatic actuator due to the use of a fail-in-place module.

Before working on the positioner, actuator or any other valve accessories:

➔ *Depressurize all plant sections concerned and the actuator. Release any stored energy.*

⚠ WARNING

Crush hazard arising from actuator and plug stem moving.

➔ *Do not insert hands or finger into the yoke while the air supply is connected to the positioner.*

➔ *Before working on the positioner, disconnect and lock the pneumatic air supply.*

➔ *Do not impede the movement of the actuator and plug stem by inserting objects into the yoke.*

Malfunctions and errors are indicated on the display by error messages in conjunction with an icon for status classification (see Table 9-1) and an error ID. Table 9-2 lists possible error messages and recommended action.

Any generated error messages in positioners with a binary output configured as a fault alarm output are assigned the 'Failure' status. In addition, error messages generated over the fault alarm output can also be configured to appear with the condensed state 'Function check' and/or 'Maintenance required' and 'Out of specification'. In this case, the corresponding parameters must be set (see Appendix A (configuration instructions)).

i Note

– *Contact SAMSON's After-sales Service for malfunctions not listed in the table.*

– *The status classification of error messages can be changed in SAMSON's TROVIS-VIEW software.*

Table 9-1: *NAMUR status according to NE 107*

Icon	Meaning
	Failure
	Function check
	Out of specification
	Maintenance demanded
	OK (no message)

9.1 Troubleshooting

Table 9-2: *Troubleshooting*

Error ID	Status	Message	Recommended action
1		Init: rated travel not achieved	➔ Check attachment and pin position.
2		Init: travel too small	➔ Check start-up settings. ➔ Check attachment.
3		Init: no movement	➔ Check positioner mounting, pin position and supply air. Check piping and configuration of the mounting parts. Move the positioner out of the fail-safe position.
21		Init: pin position	➔ Check pin position.
26		Timeout for detection of zero	➔ Check attachment. ➔ Check supply pressure.
27		Positioner not initialized	➔ Perform an initialization.

1) Highest classification
2) The pneumatic module (A or B) affected is also indicated in addition to the error ID.

Error ID	Status	Message	Recommended action
29		Init: incorrect operating mode	The positioner cannot perform the function that has been started because it is in the wrong mode. This message appears for example, when a test is started while the positioner is in the automatic mode (the manual mode is required to perform tests).
31		Init: canceled externally	➔ Check power supply/input signal. ➔ Check whether the forced venting is active.
36		Zero calibration shift >>	➔ Check attachment. ➔ Check supply pressure.
50		PST: start criteria not met	➔ Check the configuration of the test parameter (see Operating Instructions ▶ EB 8389-2)
51		PST: cancellation criteria met	➔ Check the configuration of the test parameter (see Operating Instructions ▶ EB 8389-2)
56		FST: start criteria not met	➔ Check the configuration of the test parameter (see Operating Instructions ▶ EB 8389-2)
57		FST: cancellation criteria met	➔ Check the configuration of the test parameter (see Operating Instructions ▶ EB 8389-2)
100		P3799: combination invalid	➔ Check configuration. Install the correct pneumatic modules.
101		No pneumatic module	➔ Install pneumatic module (at least one pneumatic module must be installed).
144		Temperature inside device below min. limit	➔ Check the installation of the control valve concerning possible environmental and ambient influences. If necessary, protect the control valve better against environmental influences.
145		Temperature inside device above max. limit	
146		Test in progress	The positioner is in the test mode (e.g. initialization process, step response test etc.). ➔ Wait until the test is completed or cancel it.

1) Highest classification
2) The pneumatic module (A or B) affected is also indicated in addition to the error ID.

Error ID	Status	Message	Recommended action
148		IP shutdown	➔ Check input signal.
149		Brownout	➔ Check power supply/input signal.
150		Operating mode not AUTO	The positioner does not follow the mA signal because it is not in automatic mode. The message no longer appears as soon as the positioner changes back to automatic mode.
153		Current too low	➔ Check power supply/input signal.
154		Current too high	➔ Check power supply/input signal.
155		Dynamic stress factor >>	➔ Check the state of the valve packing.
156		Limit for total valve travel exceeded	➔ Check valve and attachment for signs of wear.
157		Forced venting function	➔ Check supply voltage. Search for the reason why the forced venting was triggered.
160		Slot C.1: binary input active	The positioner's functioning is not impaired. The message no longer appears as soon as the binary input is no longer active.
161		Slot D.1: binary input active	
162		Z3799: combination invalid	➔ Remove the option module and, if necessary, replace it with another option module.
194		Set point deviation	➔ Check attachment. ➔ Check air supply. ➔ Check air lines/connections.
195		Lower end position shifted	➔ Check seat and plug.
196		Upper end position shifted	➔ Check seat and plug.
201		Switch position for forced venting function incorrect	➔ Set correct switch position.

1) Highest classification
2) The pneumatic module (A or B) affected is also indicated in addition to the error ID.

Error ID	Status	Message	Recommended action
206		Valve signature recording failed	➔ Check configuration. ➔ Restart valve signature. ➔ Initialize positioner with setting 'Init. with valve signature' = Yes.
207		No supply pressure	➔ Check air supply. ➔ Check air lines/connections.
208		Low supply pressure	➔ Check air supply. ➔ Check supply pressure regulator. ➔ Check air lines/connections.
210		Supply pressure > 10 bar	➔ Check air supply. ➔ Check supply pressure regulator.
209		Pressure sensors failed	➔ Check the supply pressure. ➔ Check power supply/input signal.
211		Emergency mode active	➔ Check travel measurement.
212		Friction change (mid-pos.)	The friction conditions have changed. ➔ Check the positioner's mechanical functions and set-up.
213		Friction change (open pos.)	
214		Friction change (closed pos.)	
215		Logging suspended	The positioner's functioning is not impaired. The message no longer appears after the positioner starts logging again.
216		Slot C.2: binary input active	The positioner's functioning is not impaired. The message no longer appears as soon as the binary input is no longer active.
217		Slot D.2: binary input active	
218		Slot C.3: binary input active	
219		Slot D.3: binary input active	
221		External position sensor error	➔ Check the attachment of the external position sensor.

1) Highest classification
2) The pneumatic module (A or B) affected is also indicated in addition to the error ID.

Error ID	Status	Message	Recommended action
222	✓	Operating range in CLOSED position	➔ Check attachment. ➔ Check supply pressure. ➔ Check whether another valve can be used.
223	✓	Operating range in max. OPEN position	➔ Check attachment. ➔ Check supply pressure. ➔ Check whether another valve can be used.
224	✓	Operating range shifting towards CLOSED position	➔ Rethink the working range.
225	✓	Operating range shifts towards max. OPEN position	➔ Rethink the working range.
226	✓	Limited working range: lower range	➔ Check that pneumatic installations and connections are tight. ➔ Check supply pressure. ➔ Check plug stem for external influences that could be blocking it.
227	✓	Limited working range: upper range	➔ Check that pneumatic installations and connections are tight. ➔ Check supply pressure. ➔ Check plug stem for external influences that could be blocking it.
232	✓	Fail-in-place module	Fail-in-place module has been activated. No action possible. The error message is cleared as soon as the conditions that caused the status messages to be generated no longer prevail.
233	⊗	Fail-in-place module	➔ Contact SAMSON's After-sales Service.
2641	1)	Init: canceled (control accuracy)	➔ Check attachment.
2643	1)	Init: angle limitation	➔ Check start-up settings. ➔ Check attachment.
2644	1)	Init: low control accuracy	➔ Check attachment.
2645	1)	Init: timeout	➔ Check start-up settings. ➔ Check attachment. ➔ Check supply pressure.

1) Highest classification
2) The pneumatic module (A or B) affected is also indicated in addition to the error ID.

Error ID	Status	Message	Recommended action
3331	[1]	P3799: failure [2]	➔ Check air quality. ➔ Contact SAMSON's After-sales Service.
3332	[1]	P3799: movement impaired [2]	➔ Check air supply. ➔ Contact SAMSON's After-sales Service.
3333	[1]	P3799: maintenance required [2]	➔ Check air supply.
3329	[1]	P3799: initialization error [2]	➔ Contact SAMSON's After-sales Service.
1369		AMR signal outside range	➔ Check attachment.
2653		Hardware fault	➔ Confirm error and select AUTO operating mode. ➔ Re-initialize the positioner.
2642	[1]	Angle limitation	➔ Check attachment.

[1] Highest classification
[2] The pneumatic module (A or B) affected is also indicated in addition to the error ID.

Table 9-3: *Further troubleshooting*

Error description	Action
No reading on the display	➔ Check electrical connection and electrical power. ➔ Check the ambient temperature (the display's operating range is from –30 to +65 °C).
Actuator moves too slowly	➔ Check the supply pressure. ➔ Deactivate software restriction. ➔ Correct setting for filter (transit time). ➔ Install second pneumatic module. ➔ Check the cross-section of the piping and screw fittings. ➔ Check the configuration of the mounting parts.
Actuator moves in the wrong direction.	➔ Check the characteristic setting. ➔ Check the setting for OUTPUT. ➔ Check the piping. ➔ Check the configuration of the mounting parts.
Air leaks from the positioner.	➔ Check the installation of the pneumatic modules. ➔ Check attachment. ➔ Check the seals in the connecting plate.
Limit switch does not work properly	➔ Check the mounting and cabling. ➔ Check polarity of signal wires.

9.2 Emergency action

Upon failure of the air supply, the positioner vents the actuator, causing the valve to move to the fail-safe position determined by the actuator. If a fail-in-place module is installed, it causes the pneumatic actuator to move to a position between the operating point and fail-safe position depending on the actuator size and the pressure range. As a result, emergency venting of the actuator is not guaranteed.

Upon failure of the electrical signal, the pneumatic outputs of the positioner are either vented or supplied with air. If a fail-in-place module is installed, it causes the pneumatic actuator to remain in its last position.

Plant operators are responsible for emergency action to be taken in the plant.

Tip

Emergency action in the event of valve failure is described in the associated valve documentation.

---

10 Servicing

The work described in this chapter is to be performed only by personnel appropriately qualified to carry out such tasks.

⚠ DANGER

Risk of fatal injury due to the ignition of an explosive atmosphere.

➔ *Observe EN 60079-14 (VDE 0165, Part 1) for work on the positioner in potentially explosive atmospheres.*

➔ *Work in potentially explosive atmospheres is to be performed only by personnel who has undergone special training or instructions or who is authorized to work on explosion-protected devices in hazardous areas.*

⚠ DANGER

Risk of bursting in the pneumatic actuator due to the use of a fail-in-place module.

Before working on the positioner, actuator or any other valve accessories:

➔ *Depressurize all plant sections concerned and the actuator. Release any stored energy.*

⚠ WARNING

Crush hazard arising from actuator and plug stem moving.

➔ *Do not insert hands or finger into the yoke while the air supply is connected to the positioner.*

➔ *Before working on the positioner, disconnect and lock the pneumatic air supply.*

➔ *Do not impede the movement of the actuator and plug stem by inserting objects into the yoke.*

The positioner was checked by SAMSON before it left the factory.

– The product warranty becomes void if service or repair work not described in these instructions is performed without prior agreement by SAMSON's After-sales Service.

– Only use original spare parts by SAMSON, which comply with the original specifications.

10.1 Cleaning the cover window

! NOTICE

Incorrect cleaning will damage the window.

The window is made of Makrolon® and will be damaged when cleaned with abrasive cleaning agents or agents containing solvents.

➔ *Do not rub the window dry.*

➔ *Do not use any cleaning agents containing chlorine or alcohol or abrasive cleaning agents.*

➔ *Use a non-abrasive, soft cloth for cleaning.*

10.2 Periodic inspection and testing of the positioner

SAMSON recommends inspection and testing according to Table 10-1 on page 10-2 at the minimum.

Table 10-1: *Recommended inspection and testing*

Inspection and testing	Action to be taken in the event of a negative result
Check the markings, labels and nameplates on the positioner for their readability and completeness.	Contact SAMSON when nameplates or labels are damaged, missing or incorrect to renew them.
	Clean any inscriptions that are covered with dirt and are illegible.
Check the positioner attachment.	Tighten the any loose mounting screws.
Check the pneumatic connections.	Tighten any loose male connectors of the screw fittings.
	Renew any air pipes or hoses that leak.
Check the power supply wires.	Tighten any loose cable glands.
	Make sure that the stranded wires are pushed into the terminals and tighten any loose screws on the the terminals.
	Renew damaged lines.
Check error messages on the display (indicated by the ⊗, ▽, ⚠ and ⊖ icons).	Troubleshooting (see the 'Malfunctions' chapter).

11 Decommissioning

The work described in this chapter is only to be performed by personnel appropriately qualified to carry out such tasks.

⚠ DANGER

Risk of fatal injury due to the ignition of an explosive atmosphere.

➔ *Observe EN 60079-14 (VDE 0165, Part 1) for work on the positioner in potentially explosive atmospheres.*

➔ *Work in potentially explosive atmospheres must only be performed by personnel who has undergone special training or instructions or who is authorized to work on explosion-protected devices in hazardous areas.*

⚠ DANGER

Risk of bursting in the pneumatic actuator due to the use of fail-in-place module.

Before working on the positioner, actuator or any other valve accessories:

➔ *Depressurize all plant sections concerned and the actuator. Release any stored energy.*

! NOTICE

The process is disturbed by interrupting closed-loop control.

➔ *Do not mount or service the positioner while the process is running and only after isolating the plant by closing the shut-off valves.*

To decommission the positioner, proceed as follows:

1. Disconnect and lock the air supply and signal pressure.
2. Open the positioner cover and disconnect the wires for the control signal.

12 Removal

The work described in this chapter is only to be performed by personnel appropriately qualified to carry out such tasks.

⚠ DANGER

Risk of fatal injury due to the ignition of an explosive atmosphere.

➔ *Observe EN 60079-14 (VDE 0165, Part 1) for work on the positioner in potentially explosive atmospheres.*

➔ *Work in potentially explosive atmospheres must only be performed by personnel who has undergone special training or instructions or who is authorized to work on explosion-protected devices in hazardous areas.*

1. Put the positioner out of operation (see the 'Decommissioning' chapter).
2. Disconnect the wires for the control signal from the positioner.
3. Disconnect the lines for supply air and signal pressure (not required for direct attachment using a connection block).
4. To remove the positioner, loosen the three fastening screws on the positioner.

13 Repairs

A defective positioner must be repaired or replaced.

NOTICE

Risk of positioner damage due to incorrect service or repair work.

➔ *Do not perform any repair work on your own.*

➔ *Contact SAMSON's After-sales Service for service and repair work.*

13.1 Returning devices to SAMSON

Defective positioners can be returned to SAMSON for repair.

Proceed as follows to return devices to SAMSON:

1. Put the positioner out of operation (see the 'Decommissioning' chapter).
2. Remove the positioner (see the 'Removal' chapter).
3. Proceed as described on the Returning goods page of our website
   ▶ www.samsongroup.com > Service > After-sales Service > Returning goods

14 Disposal

SAMSON is a producer registered in Europe, agency in charge
▶ www.samsongroup.com > About SAMSON > Environment, Social & Governance > Material Compliance > Waste electrical and electronic equipment (WEEE)
WEEE reg. no.: DE 62194439

Note

SAMSON can provide you with a recycling passport on request. Simply e-mail us at aftersalesservice@samsongroup.com giving details of your company address.

Tip

On request, SAMSON can appoint a service provider to dismantle and recycle the product as part of a distributor take-back scheme.

➔ Observe local, national and international refuse regulations.

➔ Do not dispose of components, lubricants and hazardous substances together with your other household waste.

15 Certificates

The following certificates are included on the next pages:

- HART®: Certificate of Registration
- EU declaration of conformity
- ATEX: EU type examination certificate (BVS 16 ATEX E 123)
- ATEX: EU type examination certificate (BVS 16 ATEX E 117 X)
- IECEx Certificate of Conformity
- FM Certificate of Conformity (FM16US0471)
- FM Certificate of Conformity (FM16CA0218)

The certificates shown were up to date at the time of publishing. The latest certificates can be found on our website:

▶ www.samsongroup.com > Products > Valve accessories > TROVIS 3793

HART® REGISTERED

Certificate of Registration
FieldComm Group Verified

Samson Manufacturer	TROVIS 3793 Product Name
0042 Manufacturer ID (Hex)	42ED Expanded Device Type (Hex)
7 HART Protocol Revision	02 Device Revision (Hex)
01 Hardware Revision (Hex)	01 Software Revision (Hex)
07/06/2021 Test Date	FieldComm Group Verification Method

The above product has successfully completed the validation process and meets the requirements to be "HART REGISTERED".

"HART REGISTERED" products conform to GB/T 29910.1-6-2013 and IEC 61158 standards.

Registration Number: L2-06-1000-954 Registration Issue Date: August 25, 2021 Approval: T. F. Martus

FIELDCOMM GROUP™
Connecting the World of Process Automation

HART® is a registered trademark of FieldComm Group

SMART IN FLOW CONTROL.

SAMSON

EU Konformitätserklärung / EU Declaration of Conformity / Déclaration UE de conformité

Die alleinige Verantwortung für die Ausstellung dieser Konformitätserklärung trägt der Hersteller/
This declaration of conformity is issued under the sole responsibility of the manufacturer/
La présente déclaration de conformité est établie sous la seule responsabilité du fabricant.
Für das folgende Produkt / For the following product / Nous certifions que le produit

Stellungsregler TROVIS/TROVIS SAFE HART® /
Positioner TROVIS/TROVIS SAFE HART® / Positionneur TROVIS/TROVIS SAFE HART®
Typ / Type / Type 3793
Option M,N,P,T,V

wird die Konformität mit den einschlägigen Harmonisierungsrechtsvorschriften der Union bestätigt /
the conformity with the relevant Union harmonisation legislation is declared with/
est conforme à la législation d'harmonisation de l'Union applicable selon les normes:

EMC 2014/30/EU	EN 61000-6-2:2005, EN 61000-6-3:2007 +A1:2011, EN 61326-1:2013
RoHS 2011/65/EU	EN 50581:2012

Hersteller / Manufacturer / Fabricant:

SAMSON AKTIENGESELLSCHAFT
Weismüllerstraße 3
D-60314 Frankfurt am Main
Deutschland/Germany/Allemagne

Frankfurt / Francfort, 2017-07-29
Im Namen des Herstellers/ On behalf of the Manufacturer/ Au nom du fabricant.

ce_3793_de_en_fru_rev07.pdf

i.V. H. Zager

Hanno Zager
Leiter Qualitätssicherung/Head of Quality Managment/
Responsable de l'assurance de la qualité

i.V. Dirk Hoffmann

Dirk Hoffmann
Zentralabteilungsleiter/Head of Department/Chef du département
Entwicklungsorganisation/Development Organization

SAMSON AKTIENGESELLSCHAFT
Weismüllerstraße 3 60314 Frankfurt am Main
Telefon: 069 4009-0 · Telefax: 069 4009-1507
E-Mail: samson@samson.de
Revison 07

1 **Translation**

Type Examination Certificate

2 **Component Intended for use on/in an Equipment or Protective System intended for use in potentially explosive atmospheres**
Directive 2014/34/EU

3 Type Examination Certificate Number: **BVS 16 ATEX E 123**

4 Product: **Positioner TROVIS / TROVIS SAFE 3793 - 850... HART®**

5 Manufacturer: **SAMSON AG**

6 Address: **Weismüllerstraße 3, 60314 Frankfurt am Main, Germany**

7 This product and any acceptable variations thereto are specified in the appendix to this certificate and the documents referred to therein.

8 DEKRA EXAM GmbH certifies that this product has been found to comply with the Essential Health and Safety Requirements relating to the design and construction of products intended for use in potentially explosive atmospheres given in Annex II to the Directive.
The examination and test results are recorded in the confidential Report No. BVS 16.2199 EU.

9 Compliance with the Essential Health and Safety Requirements has been assured by compliance with:

EN 60079-0:2012 + A11:2013	**General requirements**
EN 60079-15:2010	**Type of Protection "n"**

10 The sign "U" is placed after the certificate number. It indicates that this certificate must not be mistaken for a certificate intended for an equipment or protective system. This partial certification may be used as a basis for certification of an equipment or protective system respectively product.

11 This Type Examination Certificate relates only to the design and construction of the specified product. Further requirements of the Directive apply to the manufacturing process and supply of this product. These are not covered by this certificate.

12 The marking of the product shall include the following:

Ex **II 3G Ex nA IIC T4/T6 Gc**

DEKRA EXAM GmbH
Bochum, 2016-12-01

Signed: Dr. Franz Eickhoff
Certifier

Signed: Ralf Leiendecker
Approver

DAkkS Deutsche Akkreditierungsstelle D-PL-12003-01-00

This certificate may only be reproduced in its entirety and without any change.

DEKRA EXAM GmbH, Dinnendahlstrasse 9, 44809 Bochum, Germany,
telephone +49.234.3696-105, Fax +49.234.3696-110, zs-exam@dekra.com

13 **Appendix**

14 **Type Examination Certificate**
BVS 16 ATEX E 123

15 **Product description**

15.1 **Subject and type**

Positioner TROVIS / TROVIS SAFE 3793 - 850... HART®

3 7 9 3 – b c d e f g h i j k l m n o p q

b	c	d	e	f	g	h	i	j	k	l	m	n	o	p	q
x	x	x	x	x	x	x	x	x	x	x	x	x	x	x	x

Explosion protection
8 5 0 II 3G Ex nA IIC T4/T6 Gc
b c d

Function (not safety relevant)
e

Pneumatics (not safety relevant)
f g

Option module 1
0 0 Without
1 0 with Software Limit Switches, Binary Input and Output (Code N)
4 0 with Position Transmitter Binary Input and Output (Code T)
8 0 with Forced Venting, Binary Input and Output (Code V)
h i

Option module 2
0 0 Without
1 0 with Software Limit Switches, Binary Input and Output (Code N)
4 0 with Position Transmitter, Binary Input and Output (Code T)
8 0 with Forced Venting, Binary Input and Output (Code V)
1 5 with Inductive Limit Switches (NC) and Binary Output (Code P)
1 6 with Inductive Limit Switches (NO) and Binary Output (Code P)
3 0 with Mechanical Limit Switches (NO/NC)
j k

Pressure sensor
0 Without
1 with Pressure Sensors for p_zul, Y1 and Y2
l

Electrical connections
0 4 blanking plugs
1 1 cable gland, 3 blanking plugs
m

Housing material
0 Standard aluminum die cast
1 Stainless steel
n

Special applications (not safety relevant)
o

Additional approvals (not safety relevant)
p

Ambient temperature (not safety relevant)
q

This certificate may only be reproduced in its entirety and without any change.

DEKRA EXAM GmbH, Dinnendahlstrasse 9, 44809 Bochum, Germany,
telephone +49.234.3696-105, Fax +49.234.3696-110, zs-exam@dekra.com

DAkkS Deutsche Akkreditierungsstelle D-ZE-12066-01-00

15.2 **Description**

The TROVIS/TROVIS SAFE 3793 HART® Positioner is a single or double acting positioner for attachment to pneumatic control valves.
The positioner ensures a predetermined assignment of the valve position (controlled variable x) to the input signal (reference variable w). It compares the input signal received from a control system to the travel or rotational angle of the control valve and issues a corresponding output signal pressure (output variable y) for the pneumatic actuator.

The apparatus consists of an enclosure with degree of protection IP66 and contains several fixed mounted PCBs. In addition to the power supply terminals +11 / -12 the device contains two slots for different options modules. The options modules provide additional connection terminals for external circuits. The serial interface (5 pin socket) for performing a firmware update may only be used by the manufacturer.

Type 3793 - 850... has type of protection 'nA' and it may be used for Category 3G in Zone 2.

The Options Modules are exchangeable. The type of protection 'nA' shall be ticked on the type label of the Options Modules.

15.3 **Parameters**

15.3.1 Electrical Parameters

15.3.1.1 Signal Circuit Terminals +11 / -12

Nominal input current	I_N	4 ... 20	mA
Nominal input power	P_N	212	mW

15.3.1.2 Software Limit Switches (NAMUR) Terminals +45 / -46 and +55 / -56

Nominal input voltage	U_N	8.2	V
Nominal input power	P_N	17	mW

15.3.1.3 Binary Output (NAMUR) Terminals +83 / -84

Nominal input voltage	U_N	8.2	V
Nominal input power	P_N	17	mW

15.3.1.4 Binary Input (24 V DC) Terminals +87 / -88

Nominal input voltage	U_N	24	V
Nominal input power	P_N	120	mW

15.3.1.5 Position Transmitter Terminals +31 / -32

Nominal input voltage	U_N	24	V
Nominal input power	P_N	518	mW

DAkkS Deutsche Akkreditierungsstelle D-PL-13069-03-00

This certificate may only be reproduced in its entirety and without any change.

DEKRA EXAM GmbH, Dinnendahlstrasse 9, 44809 Bochum, Germany,
telephone +49.234.3696-105, Fax +49.234.3696-110, zs-exam@dekra.com

15.3.1.6 Forced Venting Terminals +81 / -82

Nominal input voltage	U_N	24	V
Nominal input power	P_N	173	mW

15.3.1.7 Inductive Limit Switches Terminals +41 / -42 and +51 / -52

Nominal input voltage	U_N	8.2	V
Nominal input power	P_N	17	mW

15.3.1.8 Mechanical Limit Switches Terminals 47 / 48 / 49 and 57 / 58 / 59

Nominal input voltage	U_N	28	V
Nominal input power	P_N	10	mW

15.3.2 Thermal Parameters:

Temperature Class	T4	$-40\ °C \leq T_{amb} \leq +80\ °C$
Temperature Class	T6	$-40\ °C \leq T_{amb} \leq +55\ °C$

16 **Report Number**

BVS PP 16.2199 EU, as of 2016-12-01

17 **Installation Instructions**

None

18 **Essential Health and Safety Requirements**

The Essential Health and Safety Requirements are covered by the standards listed under item 9.

19 **Drawings and Documents**

Drawings and documents are listed in the confidential report.

We confirm the correctness of the translation from the German original.
In the case of arbitration only the German wording shall be valid and binding.

DEKRA EXAM GmbH
Bochum, dated 2016-12-01
BVS-Le/Mu A 20161157

Certifier

Approver

This certificate may only be reproduced in its entirety and without any change.

DEKRA EXAM GmbH, Dinnendahlstrasse 9, 44809 Bochum, Germany,
telephone +49.234.3696-105, Fax +49.234.3696-110, zs-exam@dekra.com

1 **Translation**

EU-Type Examination Certificate

2 **Equipment intended for use in potentially explosive atmospheres Directive 2014/34/EU**

3 EU-Type Examination Certificate Number: **BVS 16 ATEX E 117**

4 Product: **Positioner type TROVIS / TROVIS SAFE 3793 - **0 HART®**

5 Manufacturer: **SAMSON AG**

6 Address: **Weismüllerstraße 3, 60314 Frankfurt am Main, Germany**

7 This product and any acceptable variations thereto are specified in the appendix to this certificate and the documents referred to therein.

8 DEKRA EXAM GmbH, Notified Body number 0158, in accordance with Article 17 of Directive 2014/34/EU of the European Parliament and of the Council, dated 26 February 2014, certifies that this product has been found to comply with the Essential Health and Safety Requirements relating to the design and construction of products intended for use in potentially explosive atmospheres given in Annex II to the Directive.
The examination and test results are recorded in the confidential Report No. BVS PP 16.2199 EU.

9 Compliance with the Essential Health and Safety Requirements has been assured by compliance with:

EN 60079-0:2012 + A11:2013	**General requirements**
EN 60079-11:2012	**Intrinsic Safety "i"**
EN 60079-15:2010	**Equipment protection by type of protection "n"**
EN 60079-31:2014	**Protection by Enclosure "t"**

10 If the sign "X" is placed after the certificate number, it indicates that the product is subject to the Special Conditions for Use specified in the appendix to this certificate.

11 This EU-Type Examination Certificate relates only to the design and construction of the specified product. Further requirements of the Directive apply to the manufacturing process and supply of this product. These are not covered by this certificate.

12 The marking of the product shall include the following:

Ex **II 2G Ex ia IIC T4/T6 Gb** **II 2D Ex ia IIIC T85°C Db**	for type 3793 - 110
Ex **II 3G Ex nA IIC T4/T6 Gc** **II 2D Ex tb IIIC T85°C Db**	for type 3793 - 810
Ex **II 2D Ex tb IIIC T85°C Db**	for type 3793 - 510

DEKRA EXAM GmbH
Bochum, 2016-12-01

Signed: Dr. Franz Eickhoff
Certifier

Signed: Ralf Leiendecker
Approver

DAkkS Deutsche Akkreditierungsstelle D-ZE-12009-01-00

This certificate may only be reproduced in its entirety and without any change.

DEKRA EXAM GmbH, Dinnendahlstrasse 9, 44809 Bochum, Germany,
telephone +49.234.3696-105, Fax +49.234.3696-110, zs-exam@dekra.com

13 **Appendix**

14 **EU-Type Examination Certificate**

BVS 16 ATEX E 117

15 **Product description**

15.1 **Subject and type**

Positioner TROVIS / TROVIS SAFE 3793 HART®

3 7 9 3 - b c d e f g h i j k l m n o p q

b	c	d	e	f	g	h	i	j	k	l	m	n	o	p	q
x	x	x	x	x	x	x	x	x	x	x	x	x	x	x	x

Explosion protection

1	**1**	**0**	II 2G Ex ia IIC T4/T6 Gb / II 2D Ex ia IIIC T85°C Db
5	**1**	**0**	II 2D Ex tb IIIC T85°C Db
8	**1**	**0**	II 3G Ex nA IIC T4/T6 Gc / II 2D Ex tb IIIC T85°C Db

b c d

Function (not safety relevant)

e

Pneumatics (not safety relevant)

f g

Option module 1

0	**0**	Without
1	**0**	with Software Limit Switches, Binary Input and Output (Code N)
4	**0**	with Position Transmitter Binary Input and Output (Code T)
8	**0**	with Forced Venting, Binary Input and Output (Code V)

h i

Option module 2

0	**0**	Without
1	**0**	with Software Limit Switches, Binary Input and Output (Code N)
4	**0**	with Position Transmitter, Binary Input and Output (Code T)
8	**0**	with Forced Venting, Binary Input and Output (Code V)
1	**5**	with Inductive Limit Switches (NC) and Binary Output (Code P)
1	**6**	with Inductive Limit Switches (NO) and Binary Output (Code P)
3	**0**	with Mechanical Limit Switches (NO/NC)

j k

Pressure sensor

0	Without
1	with Pressure Sensors for p_zul, Y1 and Y2

l

Electrical connections

0	4 blanking plugs
1	1 cable gland, 3 blanking plugs

m

Housing material

0	Standard aluminum die cast
1	Stainless steel

n

Special applications (not safety relevant)

o

Additional approvals (not safety relevant)

p

Ambient temperature (not safety relevant)

q

This certificate may only be reproduced in its entirety and without any change.

DEKRA EXAM GmbH, Dinnendahlstrasse 9, 44809 Bochum, Germany,
telephone +49.234.3696-105, Fax +49.234.3696-110, zs-exam@dekra.com

15.2 **Description**

The TROVIS/TROVIS SAFE 3793 HART® Positioner is a single or double acting positioner for attachment to pneumatic control valves.
The positioner ensures a predetermined assignment of the valve position (controlled variable x) to the input signal (reference variable w). It compares the input signal received from a control system to the travel or rotational angle of the control valve and issues a corresponding output signal pressure (output variable y) for the pneumatic actuator.

The apparatus consists of an enclosure with degree of protection IP66 and contains several fixed mounted PCBs. In addition to the power supply terminals +11 / -12 the device contains two slots for different options modules. The options modules provide additional connection terminals for external circuits. The serial interface (5 pin socket) for performing a firmware update may only be used by the manufacturer.

Depending on the type of the apparatus there are different types of protection:
Type 3793 - 110… has type of protection 'ia' and it may be used for Category 2G and 2D (Zone 1 and Zone 21).
Type 3793 - 510… has type of protection 'tb' and it may be used for Category 2D (Zone 21).
Type 3793 - 810… has type of protection 'nA' and 'tb' and it may be used for Category 3G and 2D (Zone 2 and Zone 21).

The options modules are exchangeable. The type of protection of the apparatus shall be marked on the type label of the options modules. It is not allowed to use an options module with type of protection 'ia', if it has ever been connected to a non-intrinsically safe circuit.

The Options Module Code P includes a Pepperl+Fuchs inductive limit switch type SJ2-SN (Certificate: PTB 00 ATEX 2049X).

For types 3793 - 110… (type of protection 'ia'), when using the options module Code P:
Two different sets of input parameters are permissible (supply variant type 2 and type 3). If the options module is supplied with parameters type 3, the ambient temperature is limited. Refer to thermal ratings.

15.3 **Parameters**

15.3.1 Electrical Parameters

15.3.1.1 Signal Circuit Terminal +11 / -12

Nominal input current	I_N	4 … 20	mA
Nominal input power	P_N	212	mW
For types 3793 - 110…			
Maximum input voltage	U_i	28	V
Maximum input current	I_i	115	mA
Maximum input power	P_i	1	W
Maximum internal capacitance	C_i	16.3	nF
Maximum internal inductance	L_i	negligible	

This certificate may only be reproduced in its entirety and without any change.

DEKRA EXAM GmbH, Dinnendahlstrasse 9, 44809 Bochum, Germany,
telephone +49.234.3696-105, Fax +49.234.3696-110, zs-exam@dekra.com

15.3.1.2 Software Limit Switches (NAMUR) Terminals +45 / -46 and +55 / -56

Nominal input voltage	U_N	8.2	V
Nominal input power	P_N	17	mW
For types 3793 - 110...			
Maximum input voltage	U_i	16	V
Maximum input current	I_i	52	mA
Maximum input power	P_i	169	mW
Maximum internal capacitance	C_i	12.2	nF
Maximum internal inductance	L_i	negligible	

15.3.1.3 Binary Output (NAMUR) Terminal +83 / -84

Nominal input voltage	U_N	8.2	V
Nominal input power	P_N	17	mW
For types 3793 - 110...			
Maximum input voltage	U_i	16	V
Maximum input current	I_i	52	mA
Maximum input power	P_i	169	mW
Maximum internal capacitance	C_i	12.2	nF
Maximum internal inductance	L_i	negligible	

15.3.1.4 Binary Input (24 V DC) Terminal +87 / -88

Nominal input voltage	U_N	24	V
Nominal input power	P_N	120	mW
For types 3793 - 110...			
Maximum input voltage	U_i	28	V
Maximum input current	I_i	115	mA
Maximum input power	P_i	1	W
Maximum internal capacitance	C_i	11.1	nF
Maximum internal inductance	L_i	negligible	

15.3.1.5 Position Transmitter Terminal +31 / -32

Nominal input voltage	U_N	24	V
Nominal input power	P_N	518	mW
For types 3793 - 110...			
Maximum input voltage	U_i	28	V
Maximum input current	I_i	115	mA
Maximum input power	P_i	1	W
Maximum internal capacitance	C_i	11.1	nF
Maximum internal inductance	L_i	negligible	

This certificate may only be reproduced in its entirety and without any change.

DEKRA EXAM GmbH, Dinnendahlstrasse 9, 44809 Bochum, Germany,
telephone +49.234.3696-105, Fax +49.234.3696-110, zs-exam@dekra.com

15.3.1.6 Forced Venting Terminal +81 / -82

Nominal input voltage	U_N	24	V
Nominal input power	P_N	173	mW
For types 3793 - 110…			
Maximum input voltage	U_i	28	V
Maximum input current	I_i	115	mA
Maximum input power	P_i	1	W
Maximum internal capacitance	C_i	11.1	nF
Maximum internal inductance	L_i	negligible	

15.3.1.7 Inductive Limit Switches Terminals +41 / -42 and +51 / -52

Nominal input voltage	U_N	8.2	V		
Nominal input power	P_N	17	mW		
For types 3793 - 110…					
Supply variant		Type 2		Type 3	
Maximum input voltage	U_i	16	V	16	V
Maximum input current	I_i	25	mA	52	mA
Maximum input power	P_i	64	mW	169	mW
Maximum internal capacitance	C_i	71.1	nF	71.1	nF
Maximum internal inductance	L_i	100	µH	100	µH

15.3.1.8 Mechanical Limit Switches Terminals 47 / 48 / 49 and 57 / 58 / 59

Nominal input voltage	U_N	28	V
Nominal input power	P_N	10	mW
For types 3793 - 110…			
Maximum input voltage	U_i	28	V
Maximum input current	I_i	115	mA
Maximum input power	P_i	500	mW
Maximum internal capacitance	C_i	22.2	nF
Maximum internal inductance	L_i	150	µH

15.3.2 Thermal Parameters

15.3.2.1 Types 3793 - 110… Group II applications (type of protection ia)

Temperature Class	T4	$-40\ °C \leq T_{amb} \leq +80\ °C$
Temperature Class	T6	$-40\ °C \leq T_{amb} \leq +55\ °C$

Operation with Inductive Limit Switches supply variant type 3

Temperature Class	T4	$-40\ °C \leq T_{amb} \leq +70\ °C$
Temperature Class	T6	$-40\ °C \leq T_{amb} \leq +45\ °C$

15.3.2.2 Types 3793 - 110… Group III applications (type of protection ia)

Maximum surface temperature	T 85 °C	$-40\ °C \leq T_{amb} \leq +55\ °C$

15.3.2.3 Types 3793 - 810... (type of protection nA)

Temperature Class	T4	$-40\ °C \leq T_{amb} \leq +80\ °C$
Temperature Class	T6	$-40\ °C \leq T_{amb} \leq +55\ °C$

This certificate may only be reproduced in its entirety and without any change.

DEKRA EXAM GmbH, Dinnendahlstrasse 9, 44809 Bochum, Germany,
telephone +49.234.3696-105, Fax +49.234.3696-110, zs-exam@dekra.com

15.3.2.4 Types 3793 - 510... and types 3793 - 810... (type of protection tb)
Maximum surface temperature T 85 °C -40 °C ≤ T_{amb} ≤ +70 °C

16 **Report Number**

BVS PP 16.2199 EU, as of 2016-12-01

17 **Special Conditions for Use**

None

18 **Essential Health and Safety Requirements**

The Essential Health and Safety Requirements are covered by the standards listed under item 9.

19 **Drawings and Documents**

Drawings and documents are listed in the confidential report.

We confirm the correctness of the translation from the German original.
In the case of arbitration only the German wording shall be valid and binding.

DEKRA EXAM GmbH
Bochum, dated 2016-12-01
BVS-Le/Mu A 20131206

Certifier Approver

This certificate may only be reproduced in its entirety and without any change.

DEKRA EXAM GmbH, Dinnendahlstrasse 9, 44809 Bochum, Germany,
telephone +49.234.3696-105, Fax +49.234.3696-110, zs-exam@dekra.com

IECEx Certificate of Conformity

INTERNATIONAL ELECTROTECHNICAL COMMISSION
IEC Certification System for Explosive Atmospheres

for rules and details of the IECEx Scheme visit www.iecex.com

Certificate No.:	**IECEx BVS 16.0084X**	Page 1 of 5	Certificate history: Issue 0 (2016-12-07)
Status:	**Current**	Issue No: 1	
Date of Issue:	2021-07-29		
Applicant:	**SAMSON AG** Weismüllerstraße 3 60314 Frankfurt am Main **Germany**		
Equipment:	**Positioner type TROVIS / TROVIS SAFE 3793 - **1… HART®**		
Optional accessory:			
Type of Protection:	**Equipment protection by intrinsic safety "i", Equipment protection by type of protection "n", Equipment dust ignition protection by enclosure "t"**		
Marking:	Ex ia IIC T4/T6 Gb / Ex ia IIIC T85°C Db Ex tb IIIC T85°C Db Ex nA IIC T4/T6 Gc / Ex tb IIIC T85°C Db Ex nA IIC T4/T6 Gc		

Approved for issue on behalf of the IECEx Certification Body:	**Jörg Koch**
Position:	**Head of Certification Body**
Signature: (for printed version)	
Date: (for printed version)	

1. This certificate and schedule may only be reproduced in full.
2. This certificate is not transferable and remains the property of the issuing body.
3. The Status and authenticity of this certificate may be verified by visiting www.iecex.com or use of this QR Code.

Certificate issued by:

DEKRA Testing and Certification GmbH
Certification Body
Dinnendahlstrasse 9
44809 Bochum
Germany

DEKRA
On the safe side.

IECEx Certificate of Conformity

Certificate No.:	**IECEx BVS 16.0084X**	Page 2 of 5
Date of issue:	2021-07-29	Issue No: 1

Manufacturer: **SAMSON AG**
Weismüllerstraße 3
60314 Frankfurt am Main
Germany

Manufacturing locations:

This certificate is issued as verification that a sample(s), representative of production, was assessed and tested and found to comply with the IEC Standard list below and that the manufacturer's quality system, relating to the Ex products covered by this certificate, was assessed and found to comply with the IECEx Quality system requirements.This certificate is granted subject to the conditions as set out in IECEx Scheme Rules, IECEx 02 and Operational Documents as amended

STANDARDS :
The equipment and any acceptable variations to it specified in the schedule of this certificate and the identified documents, was found to comply with the following standards

IEC 60079-0:2017 Explosive atmospheres - Part 0: Equipment - General requirements
Edition:7.0

IEC 60079-11:2011 Explosive atmospheres - Part 11: Equipment protection by intrinsic safety "i"
Edition:6.0

IEC 60079-15:2010 Explosive atmospheres - Part 15: Equipment protection by type of protection "n"
Edition:4

IEC 60079-31:2013 Explosive atmospheres - Part 31: Equipment dust ignition protection by enclosure "t"
Edition:2

This Certificate **does not** indicate compliance with safety and performance requirements other than those expressly included in the Standards listed above.

TEST & ASSESSMENT REPORTS:
A sample(s) of the equipment listed has successfully met the examination and test requirements as recorded in:

Test Report:

DE/BVS/ExTR16.0084/01

Quality Assessment Report:

DE/TUN/QAR06.0011/11

IECEx Certificate of Conformity

Certificate No.:	**IECEx BVS 16.0084X**	Page 3 of 5
Date of issue:	2021-07-29	Issue No: 1

EQUIPMENT:
Equipment and systems covered by this Certificate are as follows:

Type code:

See Annex

Ratings:

See Annex

SPECIFIC CONDITIONS OF USE: YES as shown below:
For TROVIS / TROVIS SAFE 3793-111:
For applications in Dust Group IIIC, the cable glands, blanking plugs and connectors supplied must be replaced with certified ones. The cable glands, blanking plugs and connectors must be suitable for the certified temperature range and have a degree of protection of at least IP54.

IECEx Certificate of Conformity

Certificate No.:	**IECEx BVS 16.0084X**	Page 4 of 5
Date of issue:	2021-07-29	Issue No: 1

Equipment (continued):

The TROVIS/TROVIS SAFE 3793 HART® Positioner is a single or double acting positioner for attachment to pneumatic control valves.

The positioner ensures a predetermined assignment of the valve position (controlled variable x) to the input signal (reference variable w). It compares the input signal received from a control system to the travel or rotational angle of the control valve and issues a corresponding output signal pressure
(output variable y) for the pneumatic actuator.

The apparatus consists of an enclosure with degree of protection IP66 and contains several fixed mounted PCBs. In addition to the power supply terminals +11 / -12 the device contains two slots for different options modules. The options modules provide additional connection terminals for external circuits. The serial interface (5 pin socket) for performing a firmware update may only be used by the manufacturer.

Depending on the type of the apparatus there are different types of protection:

Type 3793 - 111… has type of protection ‘ia’ and it may be used for EPL Gb and Db
(Zone 1 and Zone 21).

Type 3793 - 511… has type of protection ‘tb’ and it may be used for EPL Db (Zone 21).

Type 3793 - 811… has type of protection ‘nA’ and ‘tb’ and it may be used for EPL Gc and Db
(Zone 2 and Zone 21).

Type 3793 - 851… has type of protection ‘nA’ and it may be used for EPL Gc (Zone 2).

The options modules are exchangeable.
The type of protection of the apparatus shall be marked on the type label of the options modules. It is not allowed to use an options module with type of protection ‘ia’, if it has ever been supplied with a non-intrinsically safe circuit.

Options module Code P and Code F includes a Pepperl+Fuchs inductive limit switch type SJ2-SN which is separately certified (Certificate IECEx PTB 11.0092X).

For types 3793 - 111… (type of protection ‘ia’), when using the options module Code P:

Two different sets of input parameters are permissible (supply variant type 2 and type 3). If the options module is supplied with parameters type 3, the ambient temperature is limited. Refer to thermal ratings.

For explosion protection “Ex nA” the external travel sensor I is not permitted.

For explosion protection “Ex tb” (Option module 2, jk=50 and 51) the external travel sensor I is not permitted.

IECEx Certificate of Conformity

Certificate No.:	**IECEx BVS 16.0084X**	Page 5 of 5
Date of issue:	2021-07-29	Issue No: 1

DETAILS OF CERTIFICATE CHANGES (for issues 1 and above)

- The Positioner TROVIS / TROVIS SAFE 3793 is extended by additional option modules with Codes A, E, F, G, U, Y
- The circuitry of the Modem PCB is slightly modified
- The circuitry of the Multifunction PCB is slightly modified
- The circuitry of the Pneumatic Block PCB is slightly modified
- Introduction of a new Pressure sensor PCB
- Introduction of an external position sensor
- Introduction of a further material of the shaft
- Extension of the type code
- Updating of the applied standards
- Correction of Applicant's and Manufacturer's name

Annex:

BVS_16_0084X_Samson_Annex1.pdf

IECEx Certificate of Conformity

Certificate No.: **IECEx BVS 16.0084X issue 1**
Annex
Page 1 of 5

Type code:
Positioner TROVIS / TROVIS SAFE 3793 - **1… HART®
3 7 9 3 – b c d e f g h I j k l m n o p q

b	c	d	e	f	g	h	i	j	k	l	m	n	o	p	q
x	x	x	x	x	x	x	x	x	x	x	x	x	x	x	x

Explosion protection

1	**1**	**1**	Ex ia IIC T4/T6 Gb / Ex ia IIIC T85°C Db
5	**1**	**1**	Ex tb IIIC T85°C Db
8	**1**	**1**	Ex nA IIC T4/T6 Gc / Ex tb IIIC T85°C Db
8	**5**	**1**	Ex nA IIC T4/T6 Gc

b c d

Function (not safety relevant)

e

Pneumatics (not safety relevant)

f g

Option module 1

0	**0**	Without
1	**0**	with Software Limit Switches, Binary Input and Output (Code N)
4	**0**	with Position Transmitter Binary Input and Output (Code T)
4	**5**	Servo drive (AMR) (Code G)
6	**5**	with Binary input (contact), binary input (24 V DC) and binary output (NAMUR) (Code U)
8	**0**	with Forced Venting, Binary Input and Output (Code V)
9	**0**	with Analog input (4 to 20 mA) and binary output (NAMUR) (Code A)

h i

Option module 2

0	**0**	Without
1	**0**	with Software Limit Switches, Binary Input and Output (Code N)
2	**1**	with Forced Venting and Inductive limit contacts (Code F)
4	**0**	with Position Transmitter, Binary Input and Output (Code T)
5	**0**	External travel sensor I (with sensor and 10 m connecting cable) (Code E)
5	**1**	External travel sensor I (without sensor and connecting cable) (Code E)
8	**0**	with Forced Venting, Binary Input and Output (Code V)
1	**5**	with Inductive Limit Switches (NC) and Binary Output (Code P)
1	**6**	with Inductive Limit Switches (NO) and Binary Output (Code P)
3	**0**	with Mechanical Limit Switches (NO/NC)
6	**0**	External travel sensor II (4 to 20 mA) and binary output (NAMUR) (Code Y)
6	**5**	Binary input (contact), binary input (24 V DC) and binary output (NAMUR) (Code U)
9	**0**	Analog input (4 to 20 mA) and binary output (NAMUR) (Code A)

j k

Pressure sensor

0	Without
1	with Pressure Sensors for p_zul, Y1 and Y2
2	Standard (Supply 9, Output 138, Output 238)

l

Electrical connections

0	4 blanking plugs
1	1 cable gland, 3 blanking plugs

IECEx Certificate of Conformity

Certificate No.: **IECEx BVS 16.0084X issue 1**
Annex
Page 2 of 5

n
| **Special applications** (not safety relevant)
o
| **Additional approvals** (not safety relevant)
p
| **Ambient temperature** (not safety relevant)
q

Ratings:

1. Electrical data:

1.1 Signal Circuit Terminal +11 / -12

Nominal input voltage	U_N	9.8	V
Nominal input current	I_N	4 … 20	mA
Nominal input power	P_N	212	mW
For types 3793 - 111…			
Maximum input voltage	U_i	28	V
Maximum input current	I_i	115	mA
Maximum input power	P_i	1	W
Maximum internal capacitance	C_i	16.3	nF
Maximum internal inductance	L_i	negligible	

1.2 Software Limit Switches (NAMUR) Terminals +45 / -46 and +55 / -56

Nominal input voltage	U_N	8.2	V
Nominal input power	P_N	17	mW
For types 3793 - 111…			
Maximum input voltage	U_i	16	V
Maximum input current	I_i	52	mA
Maximum input power	P_i	169	mW
Maximum internal capacitance	C_i	12.2	nF
Maximum internal inductance	L_i	negligible	

1.3 Binary Output (NAMUR) Terminal +83 / -84

Nominal input voltage	U_N	8.2	V
Nominal input power	P_N	17	mW
For types 3793 - 111…			
Maximum input voltage	U_i	16	V
Maximum input current	I_i	52	mA
Maximum input power	P_i	169	mW
Maximum internal capacitance	C_i	12.2	nF
Maximum internal inductance	L_i	negligible	

1.4 Binary Input (24 V DC) Terminal +87 / -88

Nominal input voltage	U_N	24	V
Nominal input power	P_N	120	mW
For types 3793 - 111…			
Maximum input voltage	U_i	28	V

IECEx Certificate of Conformity

Certificate No.: **IECEx BVS 16.0084X issue 1**
Annex
Page 3 of 5

1.5 Binary Input (Contact) Terminal +85 / -86

Nominal input voltage	U_N	24	V
For types 3793 - 111…			
Maximum output voltage	U_o	9.6	V
Maximum output current	I_o	5	mA
Maximum output power	P_o	5.8	mW
Maximum internal capacitance	C_o	3.3	nF
Maximum internal inductance	L_o	50	mH

1.6 Position Transmitter Terminal +31 / -32

Nominal input voltage	U_N	24	V
Nominal input power	P_N	518	mW
For types 3793 - 111…			
Maximum input voltage	U_i	28	V
Maximum input current	I_i	115	mA
Maximum input power	P_i	1	W
Maximum internal capacitance	C_i	11.1	nF
Maximum internal inductance	L_i	negligible	

1.7 Servo drive (AMR) Terminals 21 / 22 / 23 / 24

For types 3793 - 111…			
Maximum output voltage	U_o	4.8	V
Maximum output current	I_o	65	mA
Maximum output power	P_o	74	mW
Maximum internal capacitance	C_o	100	µF
Maximum internal inductance	L_o	8	mH

1.8 Forced Venting Terminal +81 / -82

Nominal input voltage	U_N	24	V
Nominal input power	P_N	173	mW
For types 3793 - 111…			
Maximum input voltage	U_i	28	V
Maximum input current	I_i	115	mA
Maximum input power	P_i	1	W
Maximum internal capacitance	C_i	11.1	nF
Maximum internal inductance	L_i	negligible	

1.9 Inductive Limit Switches Terminals +41 / -42 and +51 / -52

Nominal input voltage	U_N			8.2	V
Nominal input power	P_N			17	mW
For types 3793 - 111…					
Supply variant		Type 2		Type 3	
Maximum input voltage	U_i	16	V	16	V
Maximum input current	I_i	25	mA	52	mA
Maximum input power	P_i	64	mW	169	mW

IECEx Certificate of Conformity

Certificate No.: **IECEx BVS 16.0084X issue 1**
Annex
Page 4 of 5

1.10 Mechanical Limit Switches Terminals 47 / 48 / 49 and 57 / 58 / 59

Nominal input voltage	U_N	28	V
Nominal input power	P_N	10	mW
For types 3793 - 111…			
Maximum input voltage	U_i	28	V
Maximum input current	I_i	115	mA
Maximum input power	P_i	500	mW
Maximum internal capacitance	C_i	22.2	nF
Maximum internal inductance	L_i	150	µH

1.11 Analog Input Terminal +17 / -18

Nominal input voltage	U_N	3.5	V
Nominal input current	I_N	4 … 20	mA
Nominal input power	P_N	76	mW
For types 3793 - 111…			
Maximum input voltage	U_i	28	V
Maximum input current	I_i	115	mA
Maximum input power	P_i	1	W
Maximum internal capacitance	C_i	11.1	nF
Maximum internal inductance	L_i	negligible	

1.12 External position sensor I Terminals 21 / 22 / 23 / 24

For types 3793 - 111…			
Maximum output voltage	U_o	4.8	V
Maximum output current	I_o	65	mA
Maximum output power	P_o	74	mW
Maximum internal capacitance	C_o	100	µF
Maximum internal inductance	L_o	8	mH

1.13 External position sensor II Terminal +15 / -16

Nominal input voltage	U_N	3.5	V
Nominal input current	I_N	4 … 20	mA
Nominal input power	P_N	76	mW
For types 3793 - 111…			
Maximum input voltage	U_i	28	V
Maximum input current	I_i	115	mA
Maximum input power	P_i	1	W
Maximum internal capacitance	C_i	11.1	nF
Maximum internal inductance	L_i	negligible	

IECEx Certificate of Conformity

Certificate No.: **IECEx BVS 16.0084X issue 1**
Annex
Page 5 of 5

2. Thermal Parameters:

2.1 Types 3793 - 111… Group II applications (type of protection ia)

Temperature Class	T4	-40 °C ≤ T_{amb} ≤ +80 °C
Temperature Class	T6	-40 °C ≤ T_{amb} ≤ +55 °C
Operation with Inductive Limit Switches supply variant type 3		
Temperature Class	T4	-40 °C ≤ T_{amb} ≤ +70 °C
Temperature Class	T6	-40 °C ≤ T_{amb} ≤ +45 °C
Operation with External position sensor I		
Temperature Class	T4	-30 °C ≤ T_{amb} ≤ +80 °C
Temperature Class	T6	-30 °C ≤ T_{amb} ≤ +55 °C

2.2 Types 3793 - 111… Group III applications (type of protection ia)

Maximum surface temperature	T 85 °C	-40 °C ≤ T_{amb} ≤ +55 °C
Operation with External position sensor I		
Maximum surface temperature	T 85 °C	-30 °C ≤ T_{amb} ≤ +55 °C

2.3 Types 3793 - 811… and types 3793 - 851… (type of protection nA)

Temperature Class	T4	-40 °C ≤ T_{amb} ≤ +80 °C
Temperature Class	T6	-40 °C ≤ T_{amb} ≤ +55 °C

2.4 Types 3793 - 511… and types 3793 - 811… (type of protection tb)

Maximum surface temperature	T 85 °C	-40 °C ≤ T_{amb} ≤ +70 °C

CERTIFICATE OF CONFORMITY

FM Approvals
Member of the FM Global Group

1. **HAZARDOUS (CLASSIFIED) LOCATION ELECTRICAL EQUIPMENT PER US REQUIREMENTS**
2. **Certificate No:** **FM16US0471**
3. **Equipment: (Type Reference and Name)** **Type 3793 series TROVIS HART Positioner**
4. **Name of Listing Company:** **Samson AG**
5. **Address of Listing Company:** **Weismuellerstrasse 3**
   Postfach 101901
   Frankfurt D60314
   Germany
6. The examination and test results are recorded in confidential report number:

   3059331 dated 28th August 2017

7. FM Approvals LLC, certifies that the equipment described has been found to comply with the following Approval standards and other documents:

   FM Class 3600:2022, FM Class 3610:2021, FM Class 3611:2021, FM Class 3810:2021, ANSI/ISA-60079-0:2020, ANSI/ISA-60079-11:2018, ANSI/UL 60079-31:2015, ANSI/ISA-61010-1:2012, ANSI/IEC 60529: 2020, ANSI/UL 121201:2019, NEMA 250:2008

8. If the sign 'X' is placed after the certificate number, it indicates that the equipment is subject to specific conditions of use specified in the schedule to this certificate.
9. This certificate relates to the design, examination and testing of the products specified herein. The FM Approvals surveillance audit program has further determined that the manufacturing processes and quality control procedures in place are satisfactory to manufacture the product as examined, tested and Approved.
10. Equipment Ratings:

    Intrinsically Safe for Class I, II, III Division 1, Groups A, B, C, D, E, F, and G hazardous locations in accordance with drawing EB 8493 Intrinsically Safe for Class I, Zone 1, Group IIC hazardous locations in accordance with drawing EB 8493; Nonincendive for Class I, II, III Division 2, Groups A, B, C, D, F, and G

Certificate issued by:

J.E. Marquedant
VP, Manager - Electrical Systems

18 October 2022
Date

To verify the availability of the Approved product, please refer to www.approvalguide.com

THIS CERTIFICATE MAY ONLY BE REPRODUCED IN ITS ENTIRETY AND WITHOUT CHANGE

FM Approvals LLC. 1151 Boston-Providence Turnpike, Norwood, MA 02062 USA
T: +1 (1) 781 762 4300 F: +1 (1) 781 762 9375 E-mail: information@fmapprovals.com www.fmapprovals.com

SCHEDULE

US Certificate Of Conformity No: FM16US0471

hazardous locations, indoors and outdoors (Type 4X, IP66) with an ambient temperature rating per the table in Section 11 below

11. The marking of the equipment shall include:

IS Class I, II, III, Division 1, Groups A, B, C, D, E, F, G; T* Ta*

IS Class I, Zone 1, AEx ia IIC T* Gb

NI Class I, II, III Division 2, Groups A, B, C, D, F, G; T* Ta*

For Entity and NIFW parameters – refer to document no. EB8493

Type 4X; IP66

T*, Ta* - See below

12. **Description of Equipment:**

General - The Type 3793 HART Positioner is a single or double acting positioner for attachment to pneumatic control valves. The positioner ensures a pre-determined assignment of the valve position to the input signal. It compares the input signal received from a control system to the travel or rotational angle of the control value and issues a corresponding output signal pressure for the pneumatic actuator

Construction - The 3793 HART Transmitter Positioner consists of the electronic part and one or two pneumatic modules. The parts are assembled in an enclosure made of aluminium die cast or stainless-steel die cast. The enclosure has a cover with a polymeric inspection window. As an alternative to the polymeric material the window can be made from aluminium. The enclosure has an ingress protection rating of Type 4X and IP66

Thermal Ratings

The correlation between the temperature class and permissible ambient temperature range T_a is shown in Table 2.

Table 2:

Temperature class	Permissible ambient temperature T_a
T4	–40 °C ≤ T_a ≤ + 80 °C
T6	–40 °C ≤ T_a ≤ + 55 °C

For operation with inductive limit switches used with I_{max}/I_i = 52 mA and Pi = 169 mW, the correlation between the temperature class and permissible ambient temperature range is shown in Table 3.

Table 3:

Temperature class	Permissible ambient temperature T_a
T4	–40 °C ≤ T_a ≤ + 70 °C
T6	–40 °C ≤ T_a ≤ + 45 °C

THIS CERTIFICATE MAY ONLY BE REPRODUCED IN ITS ENTIRETY AND WITHOUT CHANGE

FM Approvals LLC. 1151 Boston-Providence Turnpike, Norwood, MA 02062 USA
T: +1 (1) 781 762 4300 F: +1 (1) 781 762 9375 E-mail: information@fmapprovals.com www.fmapprovals.com

SCHEDULE

US Certificate Of Conformity No: FM16US0471

Operation with External position sensor I

Table 3:

Temperature class	Permissible ambient temperature T_a
T4	-30 °C ≤ T_a ≤ + 80 °C
T6	-30 °C ≤ T_a ≤ + 55 °C

Electrical Ratings:

Circuit	**Signal circuit**	**Position transmitter**	**Inductive limit switches**	**Software limit switches**
Circuit no.	1	2	3 and 4	5 and 6
Terminal no.	+11 / -12	+31 / -32	+41 / -42 and +51 / -52	+45 / -46 and +55 / -56
V_{max} or U_i	28 V	28 V	16 V	16 V
I_{max} or I_i	115 mA	115 mA	25 mA or 52 mA	52 mA
P_i	1 W	1 W	64 mW or 169 mW	169 mW
C_i	16.3 nF	11.1 nF	71.1 nF	12.2 nF
L_i	negligible	negligible	100 µH	negligible
Rated values	I_N = 4 mA…20 mA	U_N = 24 V DC	* U_N = 8.2 V R_i = 1 kΩ	* U_N = 8.2 V R_i = 1 kΩ
Circuit	**Mechanical limit switches**	**Forced venting**	**Binary output (NAMUR)**	**Binary input (24 V DC)**
Circuit no.	7 and 8	9	10	11
Terminal no.	47 / 48 / 49 and 57 / 58 / 59	+81 / -82	+83 / -84	+87 / -88
V_{max} or U_i	28 V	28 V	16 V	28 V
I_{max} or I_i	115 mA	115 mA	52 mA	115 mA
P_i	500 mW	1 W	169 mW	1 W
C_i	22.2 nF	11.1 nF	12.2 nF	11.1 nF
L_i	150 µH	Negligible	Negligible	Negligible
Rated values	U_N = 28 V DC	U_N = 24 V DC	* U_N = 8.2 V R_i = 1 kΩ	U_N = 24 V DC
Circuit	**Analog input**	**Servo drive (AMR) and external position sensor I**	**External position sensor II**	**Binary output (contact) (24 V DC)**
Circuit no.	12	13	14	15
Terminal no.	+17 / -18	21 / 22 /23 / 24	+15 / -16	+85 / -86

THIS CERTIFICATE MAY ONLY BE REPRODUCED IN ITS ENTIRETY AND WITHOUT CHANGE

FM Approvals LLC. 1151 Boston-Providence Turnpike, Norwood, MA 02062 USA
T: +1 (1) 781 762 4300 F: +1 (1) 781 762 9375 E-mail: information@fmapprovals.com www.fmapprovals.com

SCHEDULE

US Certificate Of Conformity No: FM16US0471

V_{max} or U_i	28 V	4.8 V	28 V	28 V
I_{max} or I_i	115 mA	65 mA	115 mA	115 mA
P_i	1 W	74 mW	1 W	1 W
C_i	11.1 nF	100 nF	11.1 nF	11.1 nF
L_i	150 µH	8mH	negligible	negligible
Rated values	U_N = 3.5 V DC		U_N = 24 V DC	U_N = 24 V DC

Positioner TROVIS / TROVIS Safe 3793-…HART
Type 3793 –130defghijklmnopq

d = function: not safety relevant
e = function: not safety relevant
fg = pneumatics: not safety relevant
hi = Option Module 1: 0 0, 1 0, 4 0, 4 5, 6 5, 8 0 or 9 0
jk= Option Module 2: 0 0, 1 0, 2 1, 4 0, 5 0, 5 1, 8 0, 1 5, 1 6, 3 0, 6 0, 6 5 or 9 0
l = Pressure sensor: 0, 1, or 2
m = Electrical connections: 0 or 1
n = Housing material: 0, 1 or 2
o = Special applications: not safety relevant
p = Additional approvals: not safety relevant
q = Permissible ambient temprature: not safety relevant

13. **Specific Conditions of Use:**

None

14. **Test and Assessment Procedure and Conditions:**

This Certificate has been issued in accordance with FM Approvals US Certification Requirements.

15. **Schedule Drawings**

A copy of the technical documentation has been kept by FM Approvals.

16. **Certificate History**

Details of the supplements to this certificate are described below:

Date	Description
28th August 2017	Original Issue.
16th January 2018	Supplement 1: Report Reference: – RR212529 dated 16th January 2018. Description of the Change: Added extended temperature range

THIS CERTIFICATE MAY ONLY BE REPRODUCED IN ITS ENTIRETY AND WITHOUT CHANGE

FM Approvals LLC. 1151 Boston-Providence Turnpike, Norwood, MA 02062 USA
T: +1 (1) 781 762 4300 F: +1 (1) 781 762 9375 E-mail: information@fmapprovals.com www.fmapprovals.com

SCHEDULE

US Certificate Of Conformity No: FM16US0471

18th October 2022	Supplement 2: Report Reference: – PR459607 dated 18th October 2022. Description of the Change: 1) FM3600 updated to latest edition (2022) 2) FM3610, FM3611 and FM3810 updated to latest edition (2021) 3) ANSI/ISA 60079-0:2013 updated to ANSI/UL 60079-0:2020 4) ANSI/UL 121201:2019 added to Standards list 5) ANSI/IEC 60529:2020 added to Standards List 6) Specific Condition of Use removed (Section 13)

THIS CERTIFICATE MAY ONLY BE REPRODUCED IN ITS ENTIRETY AND WITHOUT CHANGE

FM Approvals LLC. 1151 Boston-Providence Turnpike, Norwood, MA 02062 USA
T: +1 (1) 781 762 4300 F: +1 (1) 781 762 9375 E-mail: information@fmapprovals.com www.fmapprovals.com

CERTIFICATE OF CONFORMITY

FM Approvals
Member of the FM Global Group

1. **HAZARDOUS LOCATION ELECTRICAL EQUIPMENT PER CANADIAN REQUIREMENTS**
2. **Certificate No:** **FM16CA0218**
3. **Equipment: (Type Reference and Name)** **Model Type 3793 TROVIS HART Positioner**
4. **Name of Listing Company:** **Samson AG**
5. **Address of Listing Company:** **Weismuellerstrasse 3**
   Postfach 101901
   Frankfurt D60314
   Germany
6. The examination and test results are recorded in confidential report number:

   3059331 dated 28th August 2017
7. FM Approvals LLC, certifies that the equipment described has been found to comply with the following Approval standards and other documents:

   CAN/CSA-C22.2 No. 94:R2011, CAN/CSA-C22.2 No. 213:2017, CAN/CSA-C22.2 No. 60079-0:2019, CAN/CSA-C22.2 No. 60079-11:2014, CAN/CSA-C22.2 No. 60529:2016, CAN/CSA-C22.2 No. 61010-1:2012
8. If the sign 'X' is placed after the certificate number, it indicates that the equipment is subject to specific conditions of use specified in the schedule to this certificate.
9. This certificate relates to the design, examination and testing of the products specified herein. The FM Approvals surveillance audit program has further determined that the manufacturing processes and quality control procedures in place are satisfactory to manufacture the product as examined, tested and Approved.

Certificate issued by:

J.E. Marquedant
VP, Manager - Electrical Systems

18 October 2022
Date

To verify the availability of the Approved product, please refer to www.approvalguide.com

THIS CERTIFICATE MAY ONLY BE REPRODUCED IN ITS ENTIRETY AND WITHOUT CHANGE

FM Approvals LLC. 1151 Boston-Providence Turnpike, Norwood, MA 02062 USA
T: +1 (1) 781 762 4300 F: +1 (1) 781 762 9375 E-mail: information@fmapprovals.com www.fmapprovals.com

SCHEDULE

Canadian Certificate Of Conformity No: FM16CA0218

10. Equipment Ratings:

Intrinsically Safe for Class I, II, III Division 1, Groups A, B, C, D, E, F, and G hazardous locations in accordance with drawing EB 8493 , Intrinsically Safe for Class I, Zone 1, Group IIC hazardous locations in accordance with drawing EB 8493; Nonincendive for Class I, II, III Division 2, Groups A, B, C, D, F, and G hazardous locations, indoors and outdoors (Type 4X, IP66) with an ambient temperature rating per the table in Section 11 below

11. The marking of the equipment shall include:

IS Class I, II, III, Division 1, Groups A, B, C, D, E, F, G; T* Ta*

Ex ia IIC T* Gb

NI Class I, II, III Division 2, Groups A, B, C, D, F, G; T* Ta*

For Entity and NIFW parameters – refer to document no. EB8493

Type 4X; IP66

T* - See below

12. **Description of Equipment:**

General - The Type 3793 HART Positioner is a single or double acting positioner for attachment to pneumatic control valves. The positioner ensures a pre-determined assignment of the valve position to the input signal. It compares the input signal received from a control system to the travel or rotational angle of the control value and issues a corresponding output signal pressure for the pneumatic actuator

Construction - The 3793 HART Transmitter Positioner consists of the electronic part and one or two pneumatic modules. The parts are assembled in an enclosure made of aluminium die cast or stainless-steel die cast. The enclosure has a cover with a polymeric inspection window. As an alternative to the polymeric material the window can be made from aluminium. The enclosure has an ingress protection rating of Type 4X and IP66.

Thermal Ratings

The correlation between the temperature class and permissible ambient temperature range T_a is shown in Table 2.

Table 2:

Temperature class	Permissible ambient temperature T_a
T4	–40 °C ≤ T_a ≤ + 80 °C
T6	–40 °C ≤ T_a ≤ + 55 °C

For operation with inductive limit switches used with I_{max}/I_i = 52 mA and Pi = 169 mW, the correlation between the temperature class and permissible ambient temperature range is shown in Table 3.

THIS CERTIFICATE MAY ONLY BE REPRODUCED IN ITS ENTIRETY AND WITHOUT CHANGE

FM Approvals LLC. 1151 Boston-Providence Turnpike, Norwood, MA 02062 USA
T: +1 (1) 781 762 4300 F: +1 (1) 781 762 9375 E-mail: information@fmapprovals.com www.fmapprovals.com

SCHEDULE

Canadian Certificate Of Conformity No: FM16CA0218

Table 3:

Temperature class	Permissible ambient temperature T_a
T4	–40 °C ≤ T_a ≤ + 70 °C
T6	–40 °C ≤ T_a ≤ + 45 °C

Operation with External position sensor I

Table 3:

Temperature class	Permissible ambient temperature T_a
T4	-30 °C ≤ T_a ≤ + 80 °C
T6	-30 °C ≤ T_a ≤ + 55 °C

Electrical Ratings:

Circuit	**Signal circuit**	**Position transmitter**	**Inductive limit switches**	**Software limit switches**
Circuit no.	1	2	3 and 4	5 and 6
Terminal no.	+11 / -12	+31 / -32	+41 / -42 and +51 / -52	+45 / -46 and +55 / -56
V_{max} or U_i	28 V	28 V	16 V	16 V
I_{max} or I_i	115 mA	115 mA	25 mA or 52 mA	52 mA
P_i	1 W	1 W	64 mW or 169 mW	169 mW
C_i	16.3 nF	11.1 nF	71.1 nF	12.2 nF
L_i	negligible	negligible	100 µH	negligible
Rated values	I_N = 4 mA…20 mA	U_N = 24 V DC	* U_N = 8.2 V R_i = 1 kΩ	* U_N = 8.2 V R_i = 1 kΩ
Circuit	**Mechanical limit switches**	**Forced venting**	**Binary output (NAMUR)**	**Binary input (24 V DC)**
Circuit no.	7 and 8	9	10	11
Terminal no.	47 / 48 / 49 and 57 / 58 / 59	+81 / -82	+83 / -84	+87 / -88
V_{max} or U_i	28 V	28 V	16 V	28 V
I_{max} or I_i	115 mA	115 mA	52 mA	115 mA
P_i	500 mW	1 W	169 mW	1 W
C_i	22.2 nF	11.1 nF	12.2 nF	11.1 nF

THIS CERTIFICATE MAY ONLY BE REPRODUCED IN ITS ENTIRETY AND WITHOUT CHANGE

FM Approvals LLC. 1151 Boston-Providence Turnpike, Norwood, MA 02062 USA
T: +1 (1) 781 762 4300 F: +1 (1) 781 762 9375 E-mail: information@fmapprovals.com www.fmapprovals.com

SCHEDULE

Canadian Certificate Of Conformity No: FM16CA0218

L_i	150 µH	Negligible	Negligible	Negligible
Rated values	U_N = 28 V DC	U_N = 24 V DC	* U_N = 8.2 V R_i = 1 kΩ	U_N = 24 V DC
Circuit	**Analog input**	**Servo drive (AMR) and external position sensor I**	**External position sensor II**	**Binary output (contact) (24 V DC)**
Circuit no.	12	13	14	15
Terminal no.	+17 / -18	21 / 22 /23 / 24	+15 / -16	+85 / -86
V_{max} or U_i	28 V	4.8 V	28 V	28 V
I_{max} or I_i	115 mA	65 mA	115 mA	115 mA
P_i	1 W	74 mW	1 W	1 W
C_i	11.1 nF	100 nF	11.1 nF	11.1 nF
L_i	150 µH	8mH	negligible	negligible
Rated values	U_N = 3.5 V DC		U_N = 24 V DC	U_N = 24 V DC

Positioner TROVIS / TROVIS Safe 3793…HART
Type 3793 – 130efghijklmnopq

e = function: not safety relevant
fg = pneumatics: not safety relevant
h i = Option Module 1: 0 0, 1 0, 4 0, 4 5, 6 5, 8 0 or 9 0
j k= Option Module 2: 0 0, 1 0, 2 1, 4 0, 5 0, 5 1, 8 0, 1 5, 1 6, 3 0, 6 0, 6 5 or 9 0
l = Pressure sensor: 0, 1, or 2
m = Electrical connections: 0 or 1
n = Housing material: 0, 1 or 2
o = Special applications: not safety relevant
p = Additional approvals: not safety relevant
q = Permissible ambient temprature: not safety relevant

13. **Specific Conditions of Use:**

None

14. **Test and Assessment Procedure and Conditions:**

This Certificate has been issued in accordance with FM Approvals Canadian Certification Scheme.

15. **Schedule Drawings**

A copy of the technical documentation has been kept by FM Approvals.

THIS CERTIFICATE MAY ONLY BE REPRODUCED IN ITS ENTIRETY AND WITHOUT CHANGE

FM Approvals LLC. 1151 Boston-Providence Turnpike, Norwood, MA 02062 USA
T: +1 (1) 781 762 4300 F: +1 (1) 781 762 9375 E-mail: information@fmapprovals.com www.fmapprovals.com

SCHEDULE

Canadian Certificate Of Conformity No: FM16CA0218

16. **Certificate History**

Details of the supplements to this certificate are described below:

Date	Description
28th August 2017	Original Issue.
16th January 2018	Supplement 1: Report Reference: – RR212529 dated 16th January 2018. Description of the Change: Added extended temperature range
18th October 2022	Supplement 2: Report Reference: – PR459607 dated 18th October 2022. Description of the Change: 1) CAN/CSA C22.2 No 60079-0:2015 updated to CSA C22.2 No 60079-0:2019 2) CAN/CSA C22.2 No. 157-92 removed from Standards list 3) CAN/CSA C22.2 No. 213 updated to latest edition (2017) 4) Specific Condition of Use removed (Section 13)

THIS CERTIFICATE MAY ONLY BE REPRODUCED IN ITS ENTIRETY AND WITHOUT CHANGE

FM Approvals LLC. 1151 Boston-Providence Turnpike, Norwood, MA 02062 USA
T: +1 (1) 781 762 4300 F: +1 (1) 781 762 9375 E-mail: information@fmapprovals.com www.fmapprovals.com

Addendum Page 1

Installation Manual for Apparatus certified by FM Approvals for use in Hazardous Classified Locations

Electrical rating of Intrinsically Safe / Non-Incendive Apparatus for installation in Hazardous Locations

Table 1: Maximum values

Circuit	**Signal Circuit**	**Position Transmitter**	**Limit Switches Inductive**	**Limit Switches Software**
Circuit No.	1	2	3 and 4	5 and 6
Terminal No.	+11 / -12	+31 / -32	+41 / -42 and +51 / -52	+45 / -46 and +55 / -56
V_{max} or U_i	28 V	28 V	16 V	16 V
I_{max} or I_i	115 mA	115 mA	25 mA or 52 mA	52 mA
P_i	1 W	1 W	64 mW or 169 mW	169 mW
C_i	16.3 nF	11.1 nF	71.1 nF	12.2 nF
L_i	negligible	negligible	100 µH	negligible
Rated values	I_N = 4 mA…20 mA	U_N = 24 V DC	* U_N = 8.2 V R_i = 1 kΩ	* U_N = 8.2 V R_i = 1 kΩ
Circuit	**Limit Switches Mechanical**	**Forced Venting**	**Binary Output (NAMUR)**	**Binary Input (24 V DC)**
Circuit No.	7 and 8	9	10	11
Terminal No.	47 / 48 / 49 and 57 / 58 / 59	+81 / -82	+83 / -84	+87 / -88
V_{max} or U_i	28 V	28 V	16 V	28 V
I_{max} or I_i	115 mA	115 mA	52 mA	115 mA
P_i	500 mW	1 W	169 mW	1 W
C_i	22.2 nF	11.1 nF	12.2 nF	11.1 nF
L_i	150 µH	negligible	negligible	negligible
Rated values	U_N = 28 V DC	U_N = 24 V DC	* U_N = 8.2 V R_i = 1 kΩ	U_N = 24 V DC
Circuit	**Analog Input**	**Servo drive(AMR) and External position sensor I**	**External position sensor II**	**Binary output (Contact) (24 V DC)**
Circuit No.	12	13	14	15
Terminal No.	+17 / -18	21 / 22 /23 / 24	+15 / -16	+85 / -86
V_{max} or U_i	28 V	4.8 V	28 V	28 V
I_{max} or I_i	115 mA	65 mA	115 mA	115 mA
P_i	1 W	74 mW	1 W	1 W
C_i	11.1 nF	100 nF	11.1 nF	11.1 nF
L_i	150 µH	8mH	negligible	negligible
Rated values	U_N = 3.5 V DC		U_N = 24 V DC	U_N = 24 V DC

* For connection to NAMUR switching amplifier acc. to IEC 60947-5-6

Note: Entity / Nonincendive Field Wiring Parameters must meet the following requirements:
U_0 or $V_{OC} \leq U_i$ or V_{max} / I_0 or $I_{SC} \leq I_i$ or I_{max} / $P_0 \leq P_i$ or P_{max}
C_a or $C_O \geq C_i + C_{Cable}$ / L_a or $L_O \geq L_i + L_{Cable}$

Revision Control Number: 1 / August 2022 **Addendum to EB 8493 EN**

Addendum Page 2

The correlation between Temperature Class and permissible ambient temperature range T_a is shown in Table 2.

Table 2:

Temperature Class	Permissible ambient temperature T_a
T4	-40 °C ≤ T_a ≤ + 80 °C
T6	-40 °C ≤ T_a ≤ + 55 °C

For operation with Inductive Limit Switches (3793-130.....15 or 3793-130.....16) used with I_{max}/I_i = 52 mA and Pi = 169 mW the correlation between Temperature Class and permissible ambient temperature range is shown in Table 3.

Table 3:

Temperature Class	Permissible ambient temperature T_a
T4	-40 °C ≤ T_a ≤ + 70 °C
T6	-40 °C ≤ T_a ≤ + 45 °C

Addendum Page 3

Intrinsically Safe when installed as specified in manufacturer´s installation Manual.

FM approved for Hazardous Locations

Class I, Division 1 and 2, Groups A, B, C, D
Class II, Division 1, Groups E, F, G
Class III, Division 1

Class I, Zone 1, AEx ia IIC T4/T6

Enclosure Type 4X / IP 66

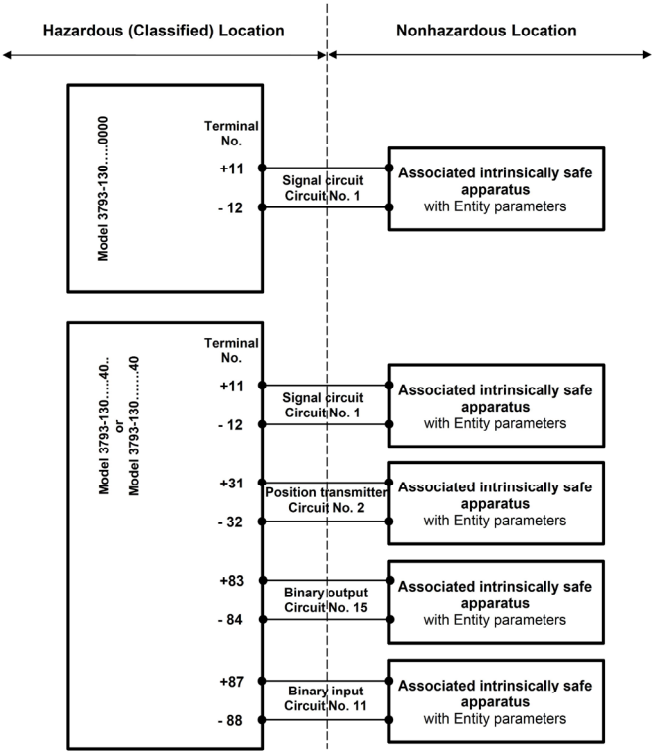

Revision Control Number: 1 / August 2022 **Addendum to EB 8493 EN**

Addendum Page 4

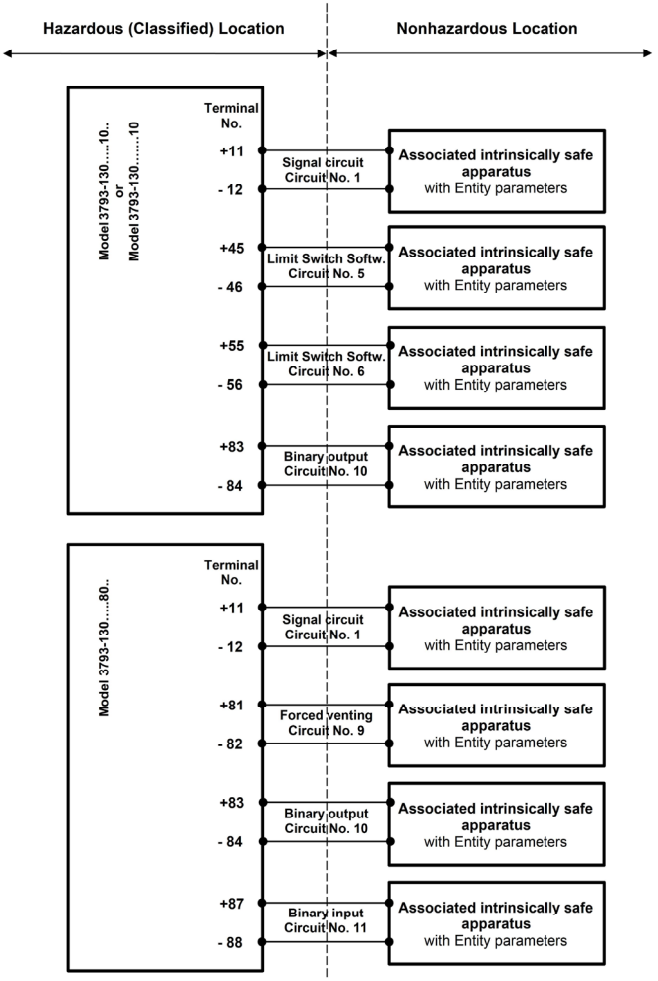

Revision Control Number: 1 / August 2022 Addendum to EB 8493 EN

Addendum Page 5

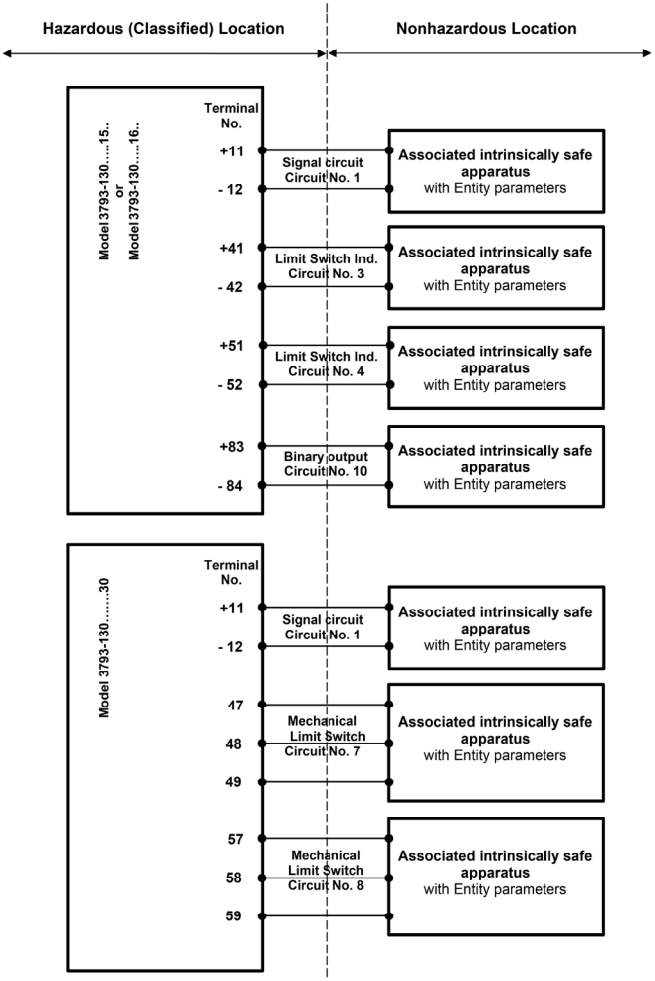

Revision Control Number: 1 / August 2022 Addendum to EB 8493 EN

Addendum Page 6

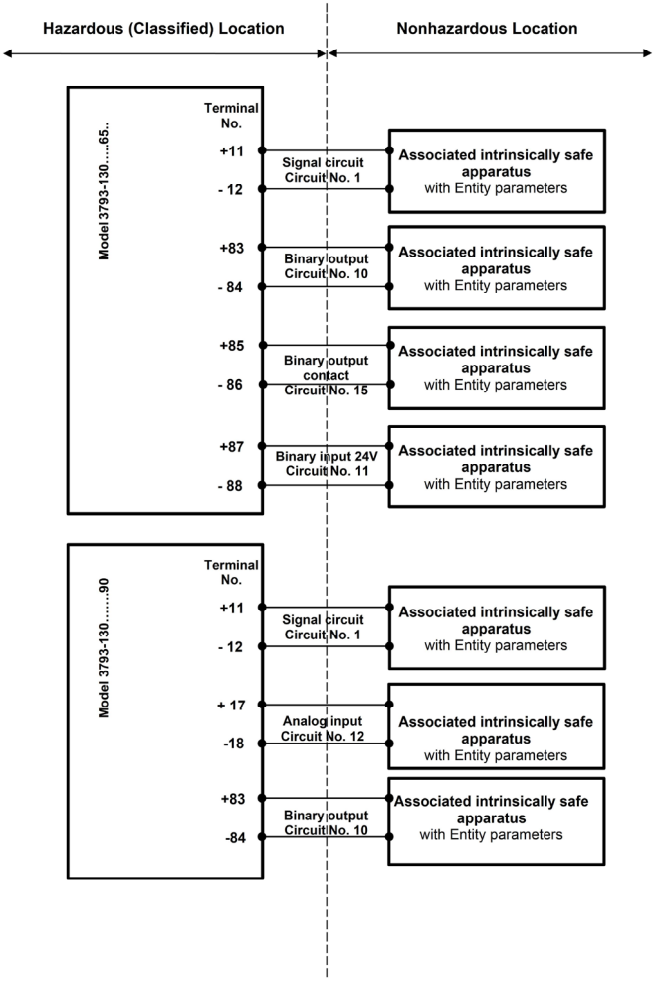

Revision Control Number: 1 / August 2022 Addendum to EB 8493 EN

Addendum Page 7

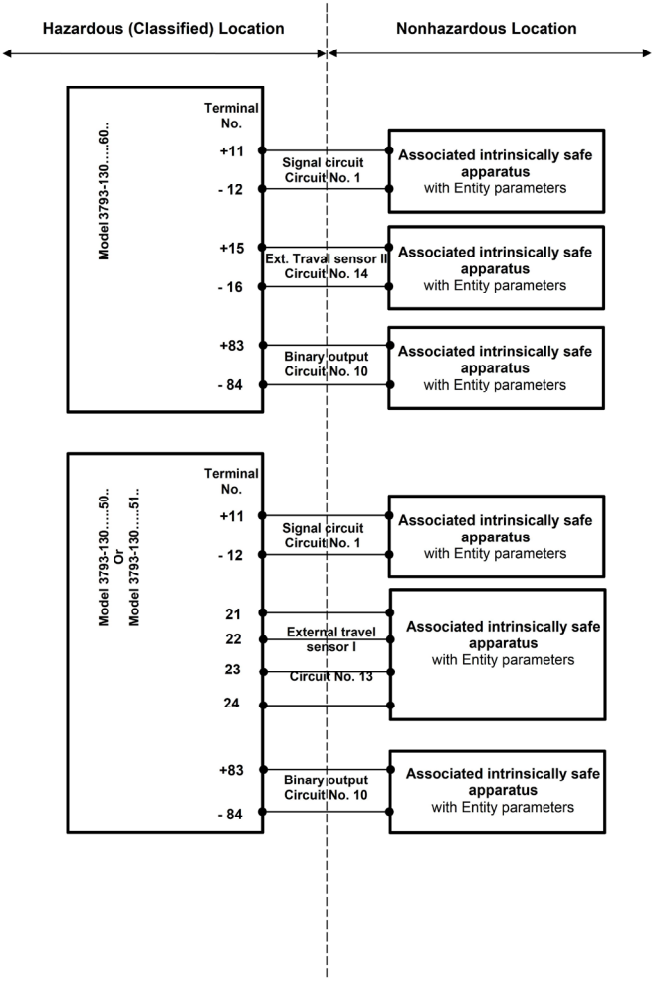

Revision Control Number: 1 / August 2022 Addendum to EB 8493 EN

Addendum Page 8

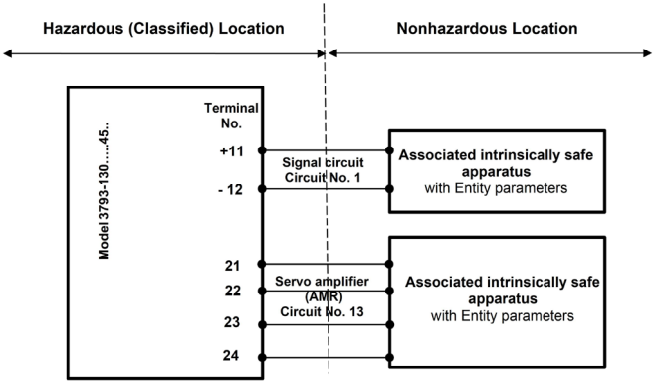

Notes:

1. The apparatus may be installed in intrinsically safe and non-incendive field wiring circuits only when used in conjunction with certified intrinsically safe or non-incendive associated apparatus. For maximum values see Table 1 on page 1.
2. For the interconnection of intrinsically safe and associated intrinsically safe apparatus not specifically examined in combination as a system, the Entity Parameters must meet following requirements:

V_{OC} or U_0	≤	U_i or V_{max}
I_{SC} or I_0	≤	I_i or I_{max}
P_0	≤	P_i or P_{max}
C_a or C_O	≥	$C_i + C_{Cable}$
L_a or L_O	≥	$L_i + L_{Cable}$

3. The installation must be in accordance with Canadian Electrical Code C.E.C. Part 1.
4. The installation must be in accordance with the National Electrical Code NFPA 70 and ANSI/ISA RP 12.06.01.
5. Use only supply wires suitable for 5 °C above surrounding temperature.
6. Substitution of components may impair intrinsic safety.
7. The maximum nonhazardous area voltage must not exceed 250 Vrms.
8. Cable entry M20 x 1.5 or metal conduit

Revision Control Number: 1 / August 2022 **Addendum to EB 8493 EN**

16 Appendix A (configuration instructions)

16.1 Structure of the main display

Display/numbering	Description
0.1 [1]	Reading of valve position in degrees
0.2	Reading of valve position in %
0.12	Reading of set point in %
0.15	Reading of set point deviation in %
0.20	Reading of supply pressure in bar
0.30 [2]	Reading of status of pneumatic module in slot A
0.35 [2]	Reading of status of pneumatic module in slot B
0.40 [2]	Reading of status of option module in slot C
0.45 [2]	Reading of status of option module in slot D
0.50	Reading of generated messages
0.99	Press ⊛ to go to the menu level.

1) Reading only when the positioner has not yet been initialized
2) Reading only in the event of an error

16.2 Menu structure and parameters (main menu)

i ***Note***

The availability of executed menu items and parameters depends on the positioner's configuration and the option modules used.

16.2.1 Parameters for on-site operation

The readings shown for individual parameters and folders depend on the state of the positioner (initialized or not yet initialized) and hardware and software configuration of the positioner (e.g. installed pneumatic and option modules, parameter settings).

Parameters marked in the "Display reading" column with "–" of the table below only appear in the SAMSON TROVIS-VIEW software or DD/DTM/EDD in the specified 'On-site: write' and/or 'Diagnosis' user level.

Menu	Display reading	On-site: write	Diagnostics	Adjustment range/values [default setting]/ description	Reset		
					Initialization	Standard	Advanced
Main menu	•	•	•				
Current operating mode	–	•	•	Indicates current operating mode			
Target operating mode	1	•	•	➔ AUTO, SAFE, [MAN] Selecting the operating mode: – AUTO: automatic mode – SAFE: fail-safe position – MAN: manual mode Switchover from automatic to manual mode is bumpless. This parameter is indicated when the positioner has been initialized or not initialized with the ***MAN*** initialization mode.	•	•	•
Set point (open-loop control)	2	•	•	➔ [–90.0] to 90.0° Enter the set point for the open-loop control mode. The reading in degrees is not absolute and only intended as a guide. **Note:** The open-loop control mode is active when the positioner that has not yet been initialized.	•	•	•
Valve position	–	•	•	Reading of valve position in %			
Set point	–	•	•	Reading of set point in % **Note:** only when the positioner is in the AUTO operating mode.			
Manual set point (MAN)	3	•	•	➔ –25.0 to 125.0 % [0.0 %] The set point for manual mode (MAN) set with the rotary pushbutton. The current travel/angle is indicated in % when the positioner is initialized. **Note: Only** when the positioner is in the MAN operating mode.	•	•	•

Menu	Display reading	On-site: write	Diagnostics	Adjustment range/values [default setting]/ description	Reset		
					Initialization	Standard	Advanced
Reason for fail-safe position	4	•	•	Reason for change to fail-safe position displayed. The parameter appears when the positioner is in the fail-safe position mode. **Note: Only** when the positioner is in the SAFE operating mode.			
Change reading direction or Reading direction [1)]	5	•	•	➔ [Reading direction], Reading direction or [Pneumatics (right)], Pneumatics (left) [1)] Select the reading direction in the display			•
User level	6			➔ [On-site: read], On-site: write On-site configuration at the positioner is unlocked (revoked if no settings are entered within five minutes).			
Tag no.	–	•	•	Empty text box to enter tag details (max. 8 characters)			•
Tag no. (long)	–	•	•	Empty text box to enter tag details (max. 32 characters)			•
Start-up	**7**	•	•				
Actuator	7.1	•	•	➔ [Linear actuator], Rotary actuator, Linear actuator (expert) Select the actuator type: Linear actuator: the pin position (in mm) can be selected from the listed values in the 7.2 parameter. Rotary actuator: the '90°' pin position or 'No lever' (when an external position sensor is used) can be selected in the 'Pin position for rotary actuator' parameter. Linear actuator (expert): infinitely variable setting options for pin position (parameter in 7.4) and nominal range (parameter in 7.12)	•	•	•
Pin position for linear actuator or pin position [1)]	7.2	•	•	➔ [None], 17, 25, 35, 50, 70, 100, 200 and 300 mm Select a predefined pin position (see travel tables in the 'Installation' chapter). **Note: Only** with 'Actuator' = 'Linear actuator'	•	•	•
Pin position for rotary actuator or pin position [1)]	7.3	•	•	➔ [90°], No lever Select the pin position 'No lever' setting when an external position sensor is used **Note: Only** with 'Actuator' = 'Rotary actuator'			

Menu	Display reading	On-site: write	Diagnostics	Adjustment range/values [default setting]/ description	Reset		
					Initialization	Standard	Advanced
Pin position for linear actuator (expert) or pin position [1)]	7.4	•	•	➔ [10] to 655 mm Infinitely variable setting of the pin position **Note: Only** with 'Actuator' = ''Linear actuator (expert)'			
Pin position	7.5	•	•	Enter the current position of the follower pin. The pin position depends on the rated travel of the linear actuator (see the 'Start-up and configuration' chapter). **Note: Only** with 'Actuator' = 'Linear actuator'	•	•	•
Pin position	7.6	•	•	Enter the current position of the follower pin. The pin position depends on the nominal angle of the rotary actuator (see the 'Start-up and configuration' chapter). **Note: Only** with 'Actuator' = 'Rotary actuator'	•	•	•
Pin position	7.7	•	•	Enter the current position of the follower pin. The pin position depends on the rated travel of the linear actuator (see the 'Start-up and configuration' chapter). **Note: Only** with 'Actuator' = 'Linear actuator (expert)'	•	•	•
Nominal range for linear actuator or Nominal range [1)]	7.10	•	•	➔ 14.0 to 70.7 mm Infinitely variable setting of the nominal range in mm The adjustment range depends on the pin position entered in 'Pin position for linear actuator'. **Note: Only** with 'Actuator' = 'Linear actuator'	•	•	•
Nominal range for rotary actuator or Nominal range [1)]	7.11	•	•	➔ 24.0 to 100.0° Infinitely variable setting of the nominal range in degrees The adjustment range depends on the pin position entered in 'Pin position for rotary actuator'. **Note: Only** with 'Actuator' = 'Rotary actuator'	•	•	•
Nominal range for linear actuator (expert) or Nominal range [1)]	7.12	•	•	➔ 3.6 to 999.0 mm Infinitely variable setting of the nominal range in mm The adjustment range depends on the pin position entered in 'Pin position for linear actuator (expert)'. **Note: Only** with 'Actuator' = ''Linear actuator (expert)'	•	•	•

Menu	Display reading	On-site: write	Diagnostics	Adjustment range/values [default setting]/ description	Reset		
					Initialization	Standard	Advanced
Max. nom. range	7.16	•	•	Indicates the maximum possible nominal range. **Note: Only** positioners initialized with MAX initialization mode and 'Pin position for linear actuator' ≠ 'None'.	•	•	•
Detected nominal range	7.17	•	•	Indicates the determined nominal range for rotary actuators. **Note:** only positioners initialized with MAX initialization mode and 'Pin position for rotary actuator' ≠ 'No lever'.	•	•	•
Fail-safe position	7.20	•	•	➔ [ATO], ATC Select fail-safe position: – ATO: AIR TO OPEN ➔ The signal pressure opens the valve, e.g. for a fail-close valve. – ATO: AIR TO CLOSE ➔ The signal pressure closes the valve, e.g. for a fail-open valve. Define the fail-safe position of the valve taking the valve type and the actuator's direction of action into account:	•	•	•
Initialization mode	7.24	•	•	➔ [MAX], NOM, MAN, SUB Select the initialization mode: – MAX: travel/angle of the closure member from the closed position to the opposite stop in the actuator – NOM: travel/angle of the closure member measured from the closed position to the specified rated travel – MAN: manually selected range – SUB: substitute calibration (without initialization) See the 'Start-up and configuration' chapter for details on initialization modes.	•	•	•
Set point (open-loop control)	7.28	•	•	➔ [–90.0] to 90.0° Set point for initialization with MAN initialization mode. The reading in degrees is not absolute and only intended as a guide. **Note: Only** when initialization mode = MAN.	•	•	•
Adopt valve position 1	7.29	•	•	➔ Confirm the first end position of the valve (see the 'Start-up and configuration' chapter). **Note: Only** when initialization mode = MAN.	•	•	•

Menu	Display reading	On-site: write	Diagnostics	Adjustment range/values [default setting]/ description	Reset		
					Initialization	Standard	Advanced
First valve position	7.30	•	•	Reading of the first end position of the valve (lever position in degrees) **Note: Only** when initialization mode = MAN.	•	•	•
Adopt valve position 2	7.31	•	•	➔ Confirm the second end position of the valve (see the 'Start-up and configuration' chapter). **Note: Only** when initialization mode = MAN.	•	•	•
Second valve position	7.32	•	•	Reading of the second end position of the valve (lever position in degrees) **Note: Only** when initialization mode = MAN.	•	•	•
Current valve position	7.35	•	•	Reading of current valve position **Note: Only** when initialization mode = SUB.	•	•	•
Direction of rotation	7.36	•	•	➔ Counterclockwise, [Clockwise] Determine the lever's direction of rotation for ***MAN*** initialization mode. For example: The valve closes when the plug stem moves downward. This action causes the positioner's lever to turn counterclockwise (when looking at the display, the pneumatic module on the right) ➔ Setting: counterclockwise **Note: Only** when initialization mode = SUB.	•	•	•
Mounted device	7.50	•	•	➔ [No device], Quick exhaust valve, Fast supply Indicates whether a mounted device for fast exhaust or supply has been installed in the hook-up. The parameter is reset during initialization if the positioner detected an external fast exhaust or supply function.	•	–	–
Output P3799 (primary)	7.53	•	•	➔ [OUTPUT 138], OUTPUT 238 Select the primary output on which the diagnosis and valve signature are based (see the 'Start-up and configuration' chapter).	•	–	–
Pressure limit	7.58	•	•	➔ 2.5 to 10 bar [7.0 bar] Enter value for pressure limit in bar. Do not activate pressure limitation for double-acting actuators (with fail-safe position AIR TO OPEN). **Note: Only** positioners with pressure sensors.	•	–	–

Menu	Display reading	On-site: write	Diagnostics	Adjustment range/values [default setting]/ description	Reset		
					Initialization	Standard	Advanced
Automatic software restriction setting	7.62	•	•	➔ [Active], Not active If this setting is active, the software restriction is automatically set during initialization. **Note:** only for positioners with pneumatic module combination P3799-0001 and P3799-0000 or pneumatic module combination P3799-0003 and P3799-004 The automatic software restriction setting must not be activated when a pneumatic volume booster is mounted on the control valve.	•	–	–
Software restriction (supply)	7.64	•	•	➔ 25 to [100 %] The software restriction serves to adapt the air output capacity to the size of the actuator. The automatic software restriction must be manually adjusted if it is not activated (see the 'Start-up and configuration' chapter). **Note:** only for positioners with pneumatic module combination P3799-0001 and P3799-0000 or pneumatic module combination P3799-0003 and P3799-004	•	–	–
Software restriction (exhaust)	7.65	•	•	➔ 25 to [100 %] The software restriction serves to adapt the air output capacity to the size of the actuator. The automatic software restriction must be manually adjusted if it is not activated (see the 'Start-up and configuration' chapter). **Note:** only for positioners with pneumatic module combination P3799-0001 and P3799-0000 or pneumatic module combination P3799-0003 and P3799-004	•	–	–
Initialization including valve signature	7.68	•	•	➔ [Yes], No The valve signature is recorded after initialization is completed. In this case, the signal pressure is recorded together with the valve position and saved in the positioner as a reference value.	•	–	–
Start initialization	7.75	•	•	➔ Confirm to start initialization During initialization, the valve moves through its travel range.	–	–	–
Stop initialization	–	•	•	➔ Confirm to stop initialization			

Menu	Display reading	On-site: write	Diagnostics	Adjustment range/values [default setting]/ description	Reset		
					Initialization	Standard	Advanced
Start zero calibration	7.76	•	•	➔ Confirm to start zero calibration During zero calibration, the valve moves through its travel range.	–	–	–
Result of last initialization	7.83	•	•	Indicates whether the last initialization was successfully completed. The reason why an unsuccessful initialization was canceled is indicated.	•	–	–
Result of last zero calibration	7.84	•	•	Indicates whether the last zero calibration was successfully completed. The reason why an unsuccessful zero calibration was canceled is indicated.	•	–	–
Result of last valve signature	7.85	•	•	Indicates whether the last valve signature was successfully completed. The reason why the recording of an unsuccessful valve signature was canceled is indicated.	•	–	–
Initialization status	–	•	•	Indicates whether initialization is active or inactive.			
Zero calibration status	–	•	•	Indicates whether zero calibration is active or inactive.			
Reset initialization	–	–	•	➔ Confirm to reset initialization			
Current initialization	–	–	•	After initialization starts, the values and settings used as the basis for the initialization are listed in the following parameters. Contrary to the [Valid initialization] folder, this list of values is saved even if the initialization is not completed successfully.			
Initialization mode	–	–	•	Indicates the 'Initialization mode' parameter [7.24] specified for initialization.	•	–	–
Actuator	–	–	•	Indicates the 'Actuator' parameter [7.1] specified for initialization.	•	–	–
Pin position	–	–	•	Indicates the 'Pin position' parameter [7.5, 7.6 or 7.7] specified for initialization.	•	–	–
Fail-safe position	–	–	•	Indicates the 'Fail-safe position' parameter [7.20] specified for initialization.	•	–	–
Output P3799 (primary)	–	–	•	Indicates the 'Output P3799 (primary)' parameter [7.20] specified for initialization.	•	–	–
Pressure limit	–	–	•	Indicates the 'Pressure limit' parameter [7.58] specified for initialization.	•	–	–
Dead time (open)	–	–	•	Indicates the dead time to open during initialization in ms.	•	–	–

Menu	Display reading	On-site: write	Diagnostics	Adjustment range/values [default setting]/ description	Reset		
					Initialization	Standard	Advanced
T63 (open)	–	–	•	Indicates the opening time (in ms) recorded during initialization for a step change from 0 to 63 %.	•	–	–
T86 (open)	–	–	•	Indicates the opening time (in ms) recorded during initialization for a step change from 0 to 86 %.	•	–	–
T98 (open)	–	–	•	Indicates the opening time (in ms) recorded during initialization for a step change from 0 to 98 %.	•	–	–
Dead time (close)	–	–	•	Indicates the dead time to close during initialization in ms.	•	–	–
T63 (close)	–	–	•	Indicates the closing time (in ms) recorded during initialization for a step change from 0 to 63 %.	•	–	–
T86 (close)	–	–	•	Indicates the closing time (in ms) recorded during initialization for a step change from 0 to 86 %.	•	–	–
T98 (close)	–	–	•	Indicates the closing time (in ms) recorded during initialization for a step change from 0 to 98 %.	•	–	–
Direction of rotation	–	–	•	Indicates the 'Direction of rotation' parameter [7.36] specified for initialization.	•	–	–
Nominal range (optimized)	–	–	•	Indicates the nominal range measured with the activated speed-based end position.	•	–	–
Detected nominal range	–	–	•	Indicates the nominal range for rotary actuators determined during initialization	•	–	–
Time stamp	–	–	•	Indicates time when the initialization was performed.	•	–	–
Temperature	–	–	•	Indicates the temperature inside the device determined during initialization.	•	–	–
Supply pressure during last initialization	–	–	•	Indicates the supply pressure determined during initialization	•	–	–
Dead band (integral-action component)	–	–	•	Indicates the integral dead band determined during initialization	•	–	–
Kp (supply)	–	–	•	Indicates the proportional gain for supply determined during initialization.	•	–	–
Ki (supply)	–	–	•	Indicates the integral gain for supply determined during initialization.	•	–	–
Kd (supply)	–	–	•	Indicates the derivative gain for supply determined during initialization.	•	–	–

Menu	Display reading	On-site: write	Diagnostics	Adjustment range/values [default setting]/ description	Reset		
					Initialization	Standard	Advanced
Kp (exhaust)	–	–	•	Indicates the proportional gain for exhaust determined during initialization.	•	–	–
Ki (exhaust)	–	–	•	Indicates the integral gain for exhaust determined during initialization.	•	–	–
Kd (exhaust)	–	–	•	Indicates the derivative gain for exhaust determined during initialization.	•	–	–
Deactivation time for large signal (supply)	–	–	•	Indicates the ' Deactivation time for large signal (supply)' parameter [8.7.45] specified for initialization.	•	–	–
Deactivation time for large signal (exhaust)	–	–	•	Indicates the 'Deactivation time for large signal (exhaust)' parameter [8.7.46] specified for initialization.	•	–	–
P3799 B: control mode	–	–	•	Indicates the control mode used for the second pneumatic module (e.g. booster when two pneumatic modules are used)	•	–	–
Mounted device	–	–	•	Indicates the 'Mounted device' parameter [7.50] specified for initialization.	•	–	–
Automatic software restriction setting	–	–	•	Indicates the 'Automatic software restriction setting' parameter [7.62] specified for initialization.	•	–	–
Software restriction (supply)	–	–	•	Indicates the 'Software restriction (supply)' parameter [7.64] specified for initialization.	•	–	–
Software restriction (exhaust)	–	–	•	Indicates the 'Software restriction (exhaust)' parameter [7.65] specified for initialization.	•	–	–
Position sensor	–	–	•	Indicates the value for the (internal/external) position sensor specified for initialization (see parameter 8.10.41).	•	–	–
Valid initialization	**7.95**	•	•	After initialization has been completed successfully, the values and settings used as the basis for the initialization are listed in the following parameters.			
Actuator	7.95.1	•	•	Indicates the 'Actuator' parameter [7.1] specified for initialization.	•	–	–
Pin position	7.95.5	•	•	Indicates the 'Pin position' parameter [7.5] specified for initialization.	•	–	–
Pin position	7.95.6	•	•	Indicates the 'Pin position' parameter [7.6] specified for initialization.	•	–	–
Pin position	7.95.7	•	•	Indicates the 'Pin position' parameter [7.7] specified for initialization.	•	–	–

Menu	Display reading	On-site: write	Diagnostics	Adjustment range/values [default setting]/ description	Reset		
					Initialization	Standard	Advanced
Fail-safe position	7.95.20	•	•	Indicates the 'Fail-safe position' parameter [] specified for initialization.	•	–	–
Initialization mode	7.95.24	•	•	Indicates the 'Initialization mode' parameter [7.24] specified for initialization.	•	–	–
Mounted device	7.95.50	•	•	Indicates the 'Mounted device' parameter [7.50] specified for initialization.	•	–	–
Output P3799 (primary)	–	•	•	Indicates the 'Output P3799 (primary)' parameter [7.20] specified for initialization.	•	–	–
Pressure limit	7.95.58	•	•	Indicates the 'Pressure limit' parameter [7.58] specified for initialization.	•	–	–
Automatic software restriction setting	7.95.62	•	•	Indicates the 'Automatic software restriction setting' parameter [7.62] specified for initialization.	•	–	–
Software restriction (supply)	–	–	•	Indicates the 'Software restriction (supply)' parameter [7.64] specified for initialization.	•	–	–
Software restriction (exhaust)	–	–	•	Indicates the 'Software restriction (exhaust)' parameter [7.65] specified for initialization.	•	–	–
Dead time (open)	–	–	•	Indicates the dead time to open during initialization in ms.	•	–	–
T63 (open)	–	–	•	Indicates the opening time (in ms) recorded during initialization for a step change from 0 to 63 %.	•	–	–
T86 (open)	–	–	•	Indicates the opening time (in ms) recorded during initialization for a step change from 0 to 86 %.	•	–	–
T98 (open)	7.95.70	•	•	Indicates the opening time (in ms) recorded during initialization for a step change from 0 to 98 %.	•	–	–
Dead time (close)	–	–	•	Indicates the dead time to close during initialization in ms.	•	–	–
T63 (close)	–	–	•	Indicates the closing time (in ms) recorded during initialization for a step change from 0 to 63 %.	•	–	–
T86 (close)	–	–	•	Indicates the closing time (in ms) recorded during initialization for a step change from 0 to 86 %.	•	–	–
T98 (close)	7.95.74	•	•	Indicates the closing time (in ms) recorded during initialization for a step change from 0 to 98 %.	•	–	–
Direction of rotation	–	–	•	Indicates the 'Direction of rotation' parameter [7.36] specified for initialization.	•	–	–
Nominal range (optimized)	–	–	•	Indicates the nominal range measured with the activated speed-based end position.	•	–	–

Menu	Display reading	On-site: write	Diagnostics	Adjustment range/values [default setting]/ description	Reset		
					Initialization	Standard	Advanced
Detected nominal range	–	–	•	Indicates the nominal range for rotary actuators determined during initialization	•	–	–
Time stamp	–	–	•	Indicates time when the initialization was performed.	•	–	–
Temperature	–	–	•	Indicates the temperature inside the device determined during initialization.	•	–	–
Supply pressure during last initialization	–	–	•	Indicates the supply pressure determined during initialization	•	–	–
Dead band (integral-action component)	–	–	•	Indicates the integral dead band determined during initialization	•	–	–
Kp (supply)	7.95.82	•	•	Indicates the proportional gain for supply determined during initialization.	•	–	–
Ki (supply)	7.95.83	•	•	Indicates the integral gain for supply determined during initialization.	•	–	–
Kd (supply)	7.95.84	•	•	Indicates the derivative gain for supply determined during initialization.	•	–	–
Kp (exhaust)	7.95.89	•	•	Indicates the proportional gain for exhaust determined during initialization.	•	–	–
Ki (exhaust)	7.95.90	•	•	Indicates the integral gain for exhaust determined during initialization.	•	–	–
Kd (exhaust)	7.95.91	•	•	Indicates the derivative gain for exhaust determined during initialization.	•	–	–
Deactivation time for large signal (supply)	–	–	•	Indicates the 'Deactivation time for large signal (supply)' parameter [8.7.45] specified for initialization.	•	–	–
Deactivation time for large signal (exhaust)	–	–	•	Indicates the 'Deactivation time for large signal (exhaust)' parameter [8.7.46] specified for initialization.	•	–	–
P3799 B: control mode	–	–	•	Indicates the control mode of pneumatic module B	•	–	–
Position sensor	–	–	•	Indicates the value for the (internal/external) position sensor specified for initialization (see parameter 8.10.41).	•	–	–
Configuration	**8**	•	•				
On-site operation locked	–	•	•	Indicates whether on-site operation is locked over the device integration.	–	–	•

Menu	Display reading	On-site: write	Diagnostics	Adjustment range/values [default setting]/ description	Reset		
					Initialization	Standard	Advanced
Language of on-site operation	–	–	•	➔ [None], Language 1, Language 2, ..., Language 5 Language used on the positioner display	–	–	•
Behavior upon failure of the travel sensing	–	–	•	➔ [Emergency mode], Fail-safe position Select how the positioner is to behave when the travel sensing fails. – Emergency mode: the positioner behaves as if it is not initialized (open-loop control) – Fail-safe position: the positioner moves the valve to the defined fail-safe position (see 7.20 parameter)	–	•	–
Activate password	–	•	•	On-site: write: indicates whether the password is activated or not. Diagnosis: activate/deactivate the password to lock on-site operation	–	–	•
Change password	–	–	•	➔ 0000 to 9999, [1234] ➔ Enter the password.	–	–	•
Set point processing	**8.1**	•	•				
Lower w-range value	8.1.1	•	•	➔ [0.0] to 75.0 % The lower set point range value must be lower than 'Upper w-range value', 0 % = 4 mA. The set point range is the difference between 'Upper w-range value' and 'Lower w-range value' and must be Δw ≥ 25 % = 4 mA. When the set point range of 0 to 100 % = 4 to 20 mA, the valve must move through its entire operating range from 0 to 100 % travel/angle of rotation. In split-range operation, the valves operate with smaller set points. The control signal of the control unit to control two valves is divided such, for instance, that the valves move through their full travel/angle of rotation at only half the input signal (first valve set to 0 to 50 % = 4 to 12 mA and second valve set to 50 to 100 % =12 to 20 mA).	–	•	•
Upper w-range value	8.1.2	•	•	➔ 25.0 to [100.0 %] The upper range value of the set point range must be greater than 'Lower w-range value'.	–	•	•

Menu	Display reading	On-site: write	Diagnostics	Adjustment range/values [default setting]/ description	Reset		
					Initialization	Standard	Advanced
Direction of action	8.1.6	•	•	➔ [Increasing/increasing], Increasing/decreasing The set point's effect on the valve position is determined as follows: – Increasing/increasing: a globe valve opens as the set point increases. – Increasing/decreasing: a globe valve closes as the set point increases.	–	•	•
Characteristic	8.1.9	•	•	➔ [Linear], Equal percentage, Reverse equal percentage, Butterfly valve (linear), Butterfly valve (equal percentage), Rotary plug valve (linear), Rotary plug valve (equal percentage), Segmented ball valve (linear), Segmented ball valve (equal percentage), User-defined Select the characteristic (see Chapter 16.3).	–	•	•
Lower x-range value	8.1.12	•	•	➔ [0.0] to 99.0 % Lower range value for travel/angle in nominal or operating range The operating range is the actual travel/angle of the valve and is limited by the lower travel/angle range value and the upper travel/angle range value. Usually, the operating range and the nominal range are identical. The nominal range can be limited to the operating range by the lower and upper x-range values. The value is displayed or must be entered. The characteristic is adapted. The difference between the lower and upper x-range values must be at least 1 %.	–	•	•
Upper x-range value	8.1.13	•	•	➔ 1.0 to [100.0 %] Upper range value for travel/angle in nominal or operating range The value is displayed or must be entered. The characteristic is adapted. Example: The operating range is modified, for example to limit the range of a control valve which has been sized too large. For this function, the entire resolution range of the set point is converted to the new limits. 0 % on the display corresponds to the adjusted lower limit and 100 % to the adjusted upper limit. The difference between the lower and upper x-range values must be at least 1 %.	–	•	•

Menu	Display reading	On-site: write	Diagnostics	Adjustment range/values [default setting]/ description	Reset		
					Initialization	Standard	Advanced
Ramp time (rising)	8.1.20	•	•	➔ [0.0] to 10000.0 s Time required by the valve to move through its working range with an increasing set point. For some applications it is recommendable to limit the transit time of the actuator to prevent it from engaging too fast in the running process.	–	•	•
Ramp time (falling)	8.1.22	•	•	➔ [0.0] to 10000.0 s Time required by the valve to move through its working range with a set point to open the valve.	–	•	•
Travel/sec. (rising)	8.1.25	–	–	➔ 1.0 to 100.0 % [10.0 %] Required travel change in % per second	–	•	–
Travel/sec. (falling)	8.1.27	–	–	➔ 1.0 to 100.0 % [10.0 %] Required travel change in % per second	–	•	–
Lower end position	8.1.40	•	•	➔ [Active], Not active Activate/deactivate the 'End position w <=' (set point cutoff decrease) parameter A tight-closing of the valve is only effective when 'Lower end position' = 'Active'.	–	•	•
End position w <= (set point cutoff decrease)	8.1.41	•	•	➔ 0.0 to 49.0 % [1.0 %] If the set point w reaches up to the entered percentage at the final value that causes the valve to close, the actuator is immediately completely vented (with AIR TO OPEN) or filled with air (with AIR TO CLOSE). This action always lead to maximum tight-closing of the valve. **Note: Parameter** only active when 'Lower end position' = 'Active'.	–	•	•
Upper end position	8.1.44	•	•	➔ Active, [Not active] Activate/deactivate the 'End position w >=' (set point cutoff increase) parameter For three-way valves, the following must apply: 'Upper end position' = 'Active'.	–	•	•

Menu	Display reading	On-site: write	Diagnostics	Adjustment range/values [default setting]/ description	Reset		
					Initialization	Standard	Advanced
End position w >= (set point cutoff increase)	8.1.45	•	•	➔ 51.0 to 100.0 % [99.0 %] If the set point w reaches up to the entered percentage at the final value that causes the valve to open, the actuator is immediately filled with air (with AIR TO OPEN) or completely vented (with AIR TO CLOSE). This action leads to the valve being completely opened when it is working properly. Example: set the 'End position w >=' (set point cutoff increase) parameter to 99 % for three-way valves. **Note: Parameter** only active when 'Upper end position' = 'Active'.	–	•	•
Identification	**8.2**	•	•				
Positioner	**8.2.1**	•	•				
Article code	–	–	•	Reading of the positioner article code The article code helps identify the positioner version (see the 'Markings on the device' chapter).	–	–	–
Certification	–	–	•	Indicates whether the positioner has a valid explosion protection certificate.	–	–	•
SIL deactivation behavior	–	–	•	Indicates the set point for the safety-instrumented function 'Emergency venting' (≤3.8 mA)	–	–	•
Order number and order position	–	–	•	Indicates the order number and position when the positioner was ordered (operator details on ordering).	–	–	–
Control valve ID	–	–	•	Indicates the ID of the control valve on which the positioner is mounted (operator details on ordering).	–	–	–
Firmware version	8.2.1.5	•	•	Reading of the positioner firmware version	–	–	–
Hardware version	8.2.1.6	•	•	Reading of the positioner hardware version	–	–	–
Serial number	8.2.1.7	•	•	Indicates the serial number of the positioner	–	–	–
Configuration ID assigned to the device	–	–	•	Indicates the configuration ID of the positioner	–	–	–
Configuration ID assigned to the electronics unit	–	–	•	Indicates the configuration ID assigned to the electronics unit installed in the positioner	–	–	–

Menu	Display reading	On-site: write	Diagnostics	Adjustment range/values [default setting]/ description	Reset		
					Initialization	Standard	Advanced
Date: day	–	–	•	➔ [1] to 31 Option to enter date of start-up	–	–	•
Date: month	–	–	•	➔ [1] to 12			
Date: year	–	–	•	➔ 1900 to 2155 [2012]			
Message	–	–	•	Empty text box to enter a message (max. 32 characters)	–	–	•
Text box 1	–	–	•	Empty text boxes to enter information on the positioner, control valve and/or tag (max. 32 characters)	–	–	•
Text box 2	–	–	•				
Text box 3	–	–	•				
Text box 4	–	–	•				
Text box 5	–	–	•				
Valve	–	–	•				
Valve manufacturer	–	–	•	Option to enter valve manufacturer (max. 32 characters)	–	–	•
Description	–	–	•	Option to enter description of the valve (max. 32 characters)	–	–	•

Menu	Display reading	On-site: write	Diagnostics	Adjustment range/values [default setting]/ description		Reset		
						Initialization	Standard	Advanced
Actuator motion	–	–	•	➔ Linear motion, Rotary motion, Other, [-/-]	Option to enter valve information	–	–	•
Valve size standard	–	–	•	➔ DIN, ANSI, IG, JIS, BS, Other (mm), Other (in), [-/-]		–	–	•
Nominal size DN	–	–	•	➔ [0.0] to 65535.0		–	–	•
Flow direction	–	–	•	➔ Flow-to-open, Flow-to-close, Alternating, [-/-]		–	–	•
Max. cycle count	–	–	•	➔ 0 to 1000000000, [1000000]		–	•	•
Pressure balancing	–	–	•	➔ Without, With (PTFE), With (graphite), Other, [-/-]		–	–	•
Facing (leakage class)	–	–	•	➔ Metal seal, Lapped-in, Soft seal, Nickel seal, PTFE, PEEK, UHMWPE, FFKM, UHMWPE (polyethylene), Other, [-/-]		–	–	•
Valve seat diameter	–	–	•	➔ [0.0] to 600.0 mm		–	–	•
Kvs	–	–	•	➔ [0.0] to 10000.00		–	–	•
Kvs unit	–	–	•	➔ Kv coefficient, Tv, Other, [-/-]		–	–	•
Plug type	–	–	•	➔ Parabolic, V-port, Other, [-/-]		–	–	•
Valve characteristic	–	–	•	➔ Linear, Equal percentage, Inherent, Other, [-/-]		–	–	•
Noise reduction	–	–	•	➔ None, St I, St II, St III, Other, [-/-]		–	–	•
Actuator	–	–	•					
Actuator manufacturer	–	–	•	Option to enter actuator manufacturer (max. 32 characters)		–	–	•
Description	–	–	•	Option to enter description of the actuator (max. 32 characters)		–	–	•
Actuator motion	–	–	•	➔ Linear motion, Rotary motion, Other, [-/-]	Option to enter actuator information	–	–	•
Principle of operation	–	–	•	➔ Single acting, Double acting, Other, [-/-]		–	–	•

Menu	Display reading	On-site: write	Diagnostics	Adjustment range/values [default setting]/ description		Reset		
						Initialization	Standard	Advanced
Actuator type	–	–	•	➔ Pneumatic (diaphragm), Pneumatic (piston), Hydraulic, Electric, Other, [-/-]	Option to enter actuator information	–	–	•
Effective actuator area	–	–	•	➔ [0] to 65535 cm²		–	–	•
Lower signal pressure range value	–	–	•	➔ [0.0] to 65535.0 bar		–	–	•
Upper signal pressure range value	–	–	•	➔ [0.0] to 65535.0 bar [1.0 bar]		–	–	•
Fail-safe position	–	–	•	➔ Air-to-open (ATO), Air-to-close (ATC), Other, [-/-]		–	–	•
Supply pressure	–	–	•	➔ [0.0] to 14.0 bar		–	–	•
Further valve accessories	–	–	•			–	–	•
Manufacturer	–	–	•	Option to enter manufacturer of valve accessories (max. 32 characters)		–	–	•
Description	–	–	•	Option to enter description of the valve accessories (max. 32 characters)		–	–	•
Control parameters	**8.7**	•	•					
Activate integral-action component	8.7.1	•	•	➔ [Active] (PID), Not active (PD) The control mode can be changed from PD to PID controller and vice versa. The integral action of the PID controller is always activated after initialization has been completed successfully. It can be deactivated by this parameter. After it is deactivated, the positioner merely works as a PD controller. As a result, the positioner responds more slowly or not all to very small set point deviations. We recommend activating integral action for very precise closed-loop control.		•	•	•
Dead band (integral-action component)	8.7.2	•	•	➔ [0.1] to 100.0 % Integral dead band for closed-loop control The integral action stops when the set point deviation enters this dead band. The integral action restarts when the valve position leaves the dead band again. The adaptation is carried out automatically during closed-loop control (depending on the friction).		•	–	–

Menu	Display reading	On-site: write	Diagnostics	Adjustment range/values [default setting]/ description	Reset		
					Initialization	Standard	Advanced
Deactivation of integral action in upper end position	8.7.3	•	•	➔ 0 to 25 % [1.0 %] The integral action stops when the valve position is above this limit. The integral action is no longer included in closed-loop control if a steady-state error arises around the upper end position (e.g. increased friction, end position cannot be reached). The integral action restarts when the valve position leaves the described range again. Example: if this parameter is set to 1 %, the integral action stops for valve positions >99 %.	•	–	–
Deactivation of integral action in lower end position	8.7.4	•	•	➔ 0 to 25 % [1.0 %] The integral action stops when the valve position is below this limit. The integral action is no longer included in closed-loop control if a steady-state error arises around the lower end position (e.g. increased friction, end position cannot be reached). The integral action restarts when the valve position leaves the described range again. Example: if this parameter is set to 1 %, the integral action stops for valve positions <1 %.	•	–	–
Kp (supply)	8.7.15	•	•	➔ [3.5] to 100 Setting of the proportional gain for supply During positioner initialization, the parameters of the PID controller are optimally tuned. If the valve oscillates at a position, lowering the Kp after initialization can lead to an improvement. Check the integral and derivative action for their correct response after adjusting Kp.	•	•	•
Ki (supply)	8.7.16	•	•	➔ 0.1 to 3.0 [0.8] Setting of the integral gain for supply During positioner initialization, the parameters of the PID controller are optimally tuned. If the error is too large in steady state, increasing the Ki after initialization can lead to an improvement. Check the proportional and derivative action for their correct response after adjusting Ki.	•	•	•

Menu	Display reading	On-site: write	Diagnostics	Adjustment range/values [default setting]/ description	Reset		
					Initialization	Standard	Advanced
Kd (supply)	8.7.17	•	•	➔ 0.5 to 100.0 [20.0] Setting of the derivative gain for supply During positioner initialization, the parameters of the PID controller are optimally tuned. If the valve oscillates at a position, raising the Kd after initialization can lead to an improvement. Check the proportional and integral action for their correct response after adjusting Kp.	•	•	•
Kp (exhaust)	8.7.22	•	•	➔ [3.5] to 100.0 Setting of the proportional gain for exhaust During positioner initialization, the parameters of the PID controller are optimally tuned. If the valve oscillates at a position, lowering the Kp after initialization can lead to an improvement. Check the integral and derivative action for their correct response after adjusting Kp.	•	•	•
Ki (exhaust)	8.7.23	•	•	➔ 0.1 to 3.0 [0.8] Setting of the integral gain for exhaust During positioner initialization, the parameters of the PID controller are optimally tuned. If the error is too large in steady state, increasing the Ki after initialization can lead to an improvement. Check the proportional and derivative action for their correct response after adjusting Ki.	•	•	•
Kd (exhaust)	8.7.24	•	•	➔ 0.5 to 100.0 [20.0] Setting of the gain factor of the derivative component for the set point deviation in the PID controller for exhaust During positioner initialization, the parameters of the PID controller are optimally tuned. If the valve oscillates at a position, raising the Kd after initialization can lead to an improvement. Check the proportional and integral action for their correct response after adjusting Kp.	•	•	•
Software restriction (supply)	8.7.30	•	•	➔ 25 to 100 % Setting of the supply flow rate restriction in % of the pneumatic module (slot A) The supply flow rate of the pneumatic modules is reduced to the specified value. A reduction of the flow rate may lead to a better control accuracy for small actuators.	•	–	–

Menu	Display reading	On-site: write	Diagnostics	Adjustment range/values [default setting]/ description	Reset		
					Initialization	Standard	Advanced
Software restriction (exhaust)	8.7.32	•	•	➔ 25 to 100 % Setting of the exhaust flow rate restriction in % of the pneumatic module (slot A) The exhaust flow rate of the pneumatic modules is reduced to the specified value. A reduction of the flow rate may lead to a better control accuracy for small actuators.	•	–	–
Activation threshold for large signal (supply)	8.7.35	•	•	➔ 1.0 to 100.0 % [5.0 %] This parameter can be set after initialization is completed. The small-signal mode is active for small errors for supply below the activation threshold. The large-signal mode is activated after the error for supply exceeds the activation threshold. The large-signal mode is activated to respond to small errors if the threshold is too low. This can lead to unwanted oscillations.	•	–	–
Activation threshold for large signal (exhaust)	8.7.36	•	•	➔ 1.0 to 100.0 % [5.0 %] This parameter can be set after initialization is completed. The small-signal mode is active for small errors for exhaust below the activation threshold. The large-signal mode is activated after the error for supply exceeds the activation threshold. The large-signal mode is activated to respond to small errors if the threshold is too low. This can lead to unwanted oscillations.	–	–	–
Deactivation time for large signal (supply)	8.7.45	•	•	➔ [0] to 32767 ms Time in ms until activation of the large-signal mode (supply) If it takes longer for the supply signal to reach the set point than the expected time (taking the current velocity into account), the large-signal mode is de-activated. The time is optimized during initialization for steps of 50 % in the middle travel range. Overshooting may occur if the time selected is too short. The large-signal mode is used optimally if the time selected is too long.	–	–	–

Menu	Display reading	On-site: write	Diagnostics	Adjustment range/values [default setting]/ description	Reset		
					Initialization	Standard	Advanced
Deactivation time for large signal (exhaust)	8.7.46	•	•	➔ [0] to 32767 ms Time in ms until activation of the large-signal mode (exhaust) If it takes longer for the exhaust signal to reach the set point than the expected time (taking the current velocity into account), the large-signal mode is deactivated. The time is optimized during initialization for steps of 50 % in the middle travel range. Overshooting may occur if the time selected is too short. The large-signal mode is used optimally if the time selected is too long.	•	–	–
End position (optimized)	8.7.70	•	•	➔ [Active], Not active This parameter only applies to the end position (supply) with MAX initialization mode and an air-to-open (ATO) actuator. In all other cases, this function is deactivated. During initialization, an optimal and a mechanical end position is calculated based on an analysis of the motion speed. The optimized end position is used if the distance is small enough. We recommend only activating this function when a mechanical deformation of the actuator is explicitly specified. In this case, it leads to a higher error in the end position. As a result, the control accuracy worsens.	•	–	–
Slot options	**8.10**	•	•				
Pneumatics configuration	–	–	•	Indicates whether the pneumatic module is operated with default settings or with modified settings (configuration).	–	–	–
Forced venting switch	8.10.1	•	•	Indicates whether the forced venting option is installed and in which slot	–	–	–
P3799 A: status	8.10.2	•	•	Status reading of the pneumatic module in slot A	–	–	–
Identification	8.10.5	•	•	Article code of pneumatic module in slot A	–	–	–
Option A	–	•	•	Parameters			
P3799 B: status	8.10.8	•	•	Status reading of the pneumatic module in slot B	–	–	–
Identification	8.10.11	•	•	Article code of pneumatic module in slot B	–	–	–

Menu	Display reading	On-site: write	Diagnostics	Adjustment range/values [default setting]/ description	Reset		
					Initialization	Standard	Advanced
Option B	–	•	•	Parameters			
Status Z3799 C	8.10.20	•	•	Indicates status of the option module in slot C	–	–	–
Identification	8.10.21	–	–	ID of the option module in slot C	–	–	–
Slot C.1	8.10.22	–	–	The content of the folder depends on the option module in slot C (see page 16-27 onwards)	–	–	–
Slot C.2	8.10.23	–	–		–	–	–
Slot C.3	8.10.24	–	–		–	–	–
Status Z3799 D	8.10.30	•	•	Indicates status of the option module in slot D	–	–	–
Identification	8.10.31	–	–	ID of the option module in slot D	–	–	–
Slot D.1	8.10.32	–	–	The content of the folder depends on the option module in slot D (see page 16-27 onwards)	–	–	–
Slot D.2	8.10.33	–	–		–	–	–
Slot D.3	8.10.34	–	–		–	–	–
External position sensor status	8.10.40	•	•	Indicates whether an external position sensor exists or not.	–	•	–
Position sensor	8.10.41	•	•	➔ [Internal], External Selecting the position sensor	–	–	•
Pressure sensors	**8.10.46**	•	•				
Pressure sensors exist	8.10.46.1	•	•	➔ Yes, [No] Indicates whether the positioner has pressure sensors or not.	–	–	–
OUTPUT 138: pressure	8.10.46.2	•	•	Pressure in bar at the positioner's output 138 **Note: Only** when 'Pressure sensors exist' = 'Yes'	–	–	–
OUTPUT 238: pressure	8.10.46.3	•	•	Pressure in bar at the positioner's output 238 **Note: Only** when 'Pressure sensors exist' = 'Yes'	–	–	–
Supply pressure	8.10.46.4	•	•	Supply pressure in bar at the input (supply 9) **Note: Only** when 'Pressure sensors exist' = 'Yes'	–	–	–
HART® communication	**8.20**	•	•				
HART communication locked	8.20.1	•	•	➔ Yes, [No] Lock or unlock HART® communication	–	–	•

Menu	Display reading	On-site: write	Diagnostics	Adjustment range/values [default setting]/ description	Reset		
					Initialization	Standard	Advanced
Fixed value (communication)	8.20.3	•	•	Indicates whether the fixed value transmitted over H is active or inactive.	–	•	•
Fixed value (communication)	8.20.4	•	•	Reading of the fixed value in % transmitted over HART® communication	–	•	•
Polling address	8.20.7	•	•	➔ [0] to 63 Polling address for HART® communication	–	–	•
Loop current value	8.20.8	•	•	➔ 0, 1 Value for loop current (HART® communication) **Note:** The loop current always corresponds to the current that can be measured using an ammeter in series with the field device. It includes the loop current under alarm conditions.	–	–	•
Tag no.	8.20.12	•	•	Text box to enter description (8 characters)	–	–	•
Tag no. (long)	8.20.15	•	•	Text box to enter description (32 characters)	–	–	•
Preambles	8.20.18	•	•	➔ [5] to 20 Number of preambles	–	–	•
Find device flag	8.20.21	•	•	➔ Yes, [No] The positioner only responds to the Device Flag' command (HART® communication) if 'Find Device Flag' = 'Yes'.	–	–	•
Final assembly number	8.20.24	•	•	➔ 0 to 16777215 Final assembly number is used to identify the materials and electronics in the positioner.	–	–	•
Primary variable assignment	–	–	•	➔ [Set point at the input], Valve position, Set point deviation, Condensed state, Slot C.1: binary input, Slot D.1: binary input, Slot C.2: binary input, Slot D.2: binary input, Slot C.3: binary input, Slot D.3: binary input, Total valve travel, Current temperature, Results of PST, Results of FST, Discrete valve pos. Selects which parameter value is to be transmitted as the primary variable over HART® communication.	–	–	•

Menu	Display reading	On-site: write	Diagnostics	Adjustment range/values [default setting]/ description	Reset		
					Initialization	Standard	Advanced
Secondary variable assignment	–	–	•	➔ Set point at the input, [Valve position], Set point deviation, Condensed state, Slot C.1: binary input, Slot D.1: binary input, Slot C.2: binary input, Slot D.2: binary input, Slot C.3: binary input, Slot D.3: binary input, Total valve travel, Current temperature, Results of PST, Results of FST, Discrete valve pos. Selects which parameter value is to be transmitted as the secondary variable over HART® communication.	–	–	•
Tertiary variable assignment	–	–	•	➔ Set point at the input, Valve position, [Set point deviation], Condensed state, Slot C.1: binary input, Slot D.1: binary input, Slot C.2: binary input, Slot D.2: binary input, Slot C.3: binary input, Slot D.3: binary input, Total valve travel, Current temperature, Results of PST, Results of FST, Discrete valve pos. Selects which parameter value is to be transmitted as the tertiary variable over HART® communication.	–	–	•
Quaternary variable assignment	–	–	•	➔ Set point at the input, Valve position, Set point deviation, [Condensed state], Slot C.1: binary input, Slot D.1: binary input, Slot C.2: binary input, Slot D.2: binary input, Slot C.3: binary input, Slot D.3: binary input, Total valve travel, Current temperature, Results of PST, Results of FST, Discrete valve pos. Selects which parameter value is to be transmitted as the quaternary variable over HART® communication.	–	–	•
Device Status Master	–	–	•	Indicates the device status of the device (positioner) defined as master.	–	–	–
Loop Current Fixed Bit	–	–	•	Indicates whether the loop current is kept at a fixed value and does not respond to the process variables.	–	–	–
More Status Available Bit	–	–	•	Indicates whether additional status information is available.	–	–	–
Cold Start Bit	–	–	•	Indicates whether the positioner has been restarted since the last HART® telegram.	–	–	–

Menu	Display reading	On-site: write	Diagnostics	Adjustment range/values [default setting]/ description	Reset		
					Initialization	Standard	Advanced
Configuration Changed Bit	–	–	•	Indicates whether the configuration of the positioner has changed since the last HART® telegram.	–	–	–
Device Malfunction Bit	–	–	•	Indicates whether a positioner malfunction exists.	–	–	–

1) Different designations used in the SAMSON TROVIS-VIEW software and DD/DTM/EDD.

Option module Z3799-xxx10 [N]: Software limit switches and binary output (NAMUR)
Option module Z3799-xxx11 [X]: Software limit switches and binary output (PLC)

Menu	Display reading	Display reading	On-site: write	Diagnostics	Adjustment range/values [default setting]/description	Reset		
						Initialization	Standard	Advanced
	Slot C.1	Slot D.1						
Terminal designation	8.10.22.1	8.10.32.1	•	•	Reading of the terminal designation	–	–	–
Function	8.10.22.20	8.10.32.20	•	•	➔ [Software limit switch], Fault alarm output Select the function: – Software limit switch: Indicates limit violation (above and below limit) – Fault alarm output: indicates existing error messages with 'Failure' status classification and condensed state according to 'Error message in case of … condensed state' message.	–	•	–
Mode	8.10.22.21	8.10.32.21	•	•	➔ [Above limit], Below limit Determines whether the software limit switch is to be activated when the value exceeds or falls below the adjusted limit. **Note:** only when 'Function' = 'Software limit switch'	–	•	–

Menu	Display reading	Display reading	On-site: write	Diagnostics	Adjustment range/values [default setting]/description	Reset		
						Initialization	Standard	Advanced
Edge control	8.10.22.22	8.10.32.22	•	•	➔ [Conducting/high], Non-conducting/low Determines in which state the software limit switch or fault alarm output is active.	–	•	–
Error message in case of 'Function check' condensed state	–	–	–	•	➔ [Yes], No Selects whether error messages with the 'Function check' condensed state are indicated over the fault alarm output. **Note:** only when 'Function' = 'Fault alarm output'	–	•	–
Error message in case of 'Maintenance required' and 'Out of specification' condensed states	–	–	–	•	➔ [Yes], No Selects whether error messages with the 'Maintenance required' and 'Out of specification' condensed states are indicated over the fault alarm output. **Note:** only when 'Function' = 'Fault alarm output'	–	•	–
Limit	8.10.22.25	8.10.32.25	•	•	➔ –20 to 120 % [98 %] Limit for the response of the software limit switch **Note:** only when 'Function' = 'Software limit switch'	–	•	–
Current state	8.10.22.26	8.10.32.26	•	•	Indicates the status of the software limit switch or fault alarm output.	–	–	–
Start DO test.	8.10.22.27	8.10.32.27	•	•	Starts function test of the software limit switch or fault alarm output.	–	–	–
Test mode	8.10.22.28	8.10.32.28	•	•	Test status reading	–	–	–
	Slot C.2	Slot D.2						
Terminal designation	8.10.23.1	8.10.33.1	•	•	Reading of the terminal designation	–	–	–

Menu	Display reading	Display reading	On-site: write	Diagnostics	Adjustment range/values [default setting]/description	Reset		
						Initialization	Standard	Advanced
Function	8.10.23.20	8.10.33.20	•	•	➔ [Software limit switch], Fault alarm output Select the function: – Software limit switch: Indicates limit violation (above and below limit) – Fault alarm output: indicates existing error messages with 'Failure' status classification and condensed state according to 'Error message in case of … condensed state' message.	–	•	–
Mode	8.10.23.21	8.10.33.21	•	•	➔ [Above limit], Below limit Determines whether the software limit switch is to be activated when the value exceeds or falls below the adjusted limit. **Note:** only when 'Function' = 'Software limit switch'	–	•	–
Edge control	8.10.23.22	8.10.33.22	•	•	➔ [Conducting/high], Non-conducting/low Determines in which state the software limit switch or fault alarm output is active.	–	•	–
Error message in case of 'Function check' condensed state	–	–	–	•	➔ [Yes], No Selects whether error messages with the 'Function check' condensed state are indicated over the fault alarm output. **Note:** only when 'Function' = 'Fault alarm output'	–	•	–
Error message in case of 'Maintenance required' and 'Out of specification' condensed states	–	–	–	•	➔ [Yes], No Selects whether error messages with the 'Maintenance required' and 'Out of specification' condensed states are indicated over the fault alarm output. **Note:** only when 'Function' = 'Fault alarm output'	–	•	–

Menu	Display reading	Display reading	On-site: write	Diagnostics	Adjustment range/values [default setting]/description	Reset		
						Initialization	Standard	Advanced
Limit	8.10.23.25	8.10.33.25	•	•	➔ –20 to 120 % [98 %] Limit for the response of the software limit switch **Note:** only when 'Function' = 'Software limit switch'	–	•	–
Current state	8.10.23.26	8.10.33.26	•	•	Indicates the status of the software limit switch or fault alarm output.	–	–	–
Start DO test.	8.10.23.27	8.10.33.27	•	•	Starts function test of the software limit switch or fault alarm output.	–	–	–
Test mode	8.10.23.28	8.10.33.28	•	•	Test status reading	–	–	–
	Slot C.3	Slot D.3						
Terminal designation	8.10.24.1	8.10.34.1	•	•	Reading of the terminal designation	–	–	–
Function	8.10.24.20	8.10.34.20	•	•	➔ [Software limit switch], Fault alarm output Select the function: – Software limit switch: Indicates limit violation (above and below limit) – Fault alarm output: indicates existing error messages with 'Failure' status classification and condensed state according to 'Error message in case of … condensed state' message.	–	•	–
Mode	8.10.24.21	8.10.34.21	•	•	➔ [Above limit], Below limit Determines whether the software limit switch is to be activated when the value exceeds or falls below the adjusted limit. **Note:** only when 'Function' = 'Software limit switch'	–	•	–
Edge control	8.10.24.22	8.10.34.22	•	•	➔ [Conducting/high], Non-conducting/low Determines in which state the software limit switch or fault alarm output is active.	–	•	–

Menu	Display reading	Display reading	On-site: write	Diagnostics	Adjustment range/values [default setting]/description	Reset		
						Initialization	Standard	Advanced
Error message in case of 'Function check' condensed state	–	–	–	•	➔ [Yes], No Selects whether error messages with the 'Function check' condensed state are indicated over the fault alarm output. **Note:** only when 'Function' = 'Fault alarm output'	–	•	–
Error message in case of 'Maintenance required' and 'Out of specification' condensed states	–	–	–	•	➔ [Yes], No Selects whether error messages with the 'Maintenance required' and 'Out of specification' condensed states are indicated over the fault alarm output. **Note:** only when 'Function' = 'Fault alarm output'	–	•	–
Limit	8.10.24.25	8.10.34.25	•	•	➔ –20 to 120 % [98 %] Limit for the response of the software limit switch **Note:** only when 'Function' = 'Software limit switch'	–	•	–
Current state	8.10.24.26	8.10.34.26	•	•	Indicates the status of the software limit switch or fault alarm output.	–	–	–
Start DO test.	8.10.24.27	8.10.34.27	•	•	Starts function test of the software limit switch or fault alarm output.	–	–	–
Test mode	8.10.24.28	8.10.34.28	•	•	Test status reading	–	–	–

Option module Z3799-xxx15 [P]: Inductive limit switches and binary output (NAMUR)

Menu	Display reading	Display reading	On-site: write	Diagnostics	Adjustment range/values [default setting]/description	Reset		
						Initialization	Standard	Advanced
	Slot C.1	Slot D.1						
Terminal designation	–	8.10.32.1	•	•	Reading of the terminal designation	–	–	–

Menu	Display reading	Display reading	On-site: write	Diagnostics	Adjustment range/values [default setting]/description	Reset		
						Initialization	Standard	Advanced
Function	–	8.10.32.20	•	•	➔ [Software limit switch], Fault alarm output Select the function: – Software limit switch: Indicates limit violation (above and below limit) – Fault alarm output: indicates existing error messages with 'Failure' status classification and condensed state according to 'Error message in case of … condensed state' message.	–	•	–
Mode	–	8.10.32.21	•	•	➔ [Above limit], Below limit Determines whether the software limit switch is to be activated when the value exceeds or falls below the adjusted limit. **Note:** only when 'Function' = 'Software limit switch'	–	•	–
Edge control	–	8.10.32.22	•	•	➔ [Conducting/high], Non-conducting/low Determines in which state the software limit switch or fault alarm output is active.	–	•	–
Error message in case of 'Function check' condensed state	–	–	–	•	➔ [Yes], No Selects whether error messages with the 'Function check' condensed state are indicated over the fault alarm output. **Note:** only when 'Function' = 'Fault alarm output'	–	•	–
Error message in case of 'Maintenance required' and 'Out of specification' condensed states	–	–	–	•	➔ [Yes], No Selects whether error messages with the 'Maintenance required' and 'Out of specification' condensed states are indicated over the fault alarm output. **Note:** only when 'Function' = 'Fault alarm output'	–	•	–
Limit	–	8.10.32.25	•	•	➔ –20 to 120 % [98 %] Limit for the response of the software limit switch **Note:** only when 'Function' = 'Software limit switch'	–	•	–

Menu	Display reading	Display reading	On-site: write	Diagnostics	Adjustment range/values [default setting]/description	Reset		
						Initialization	Standard	Advanced
Current state	–	8.10.32.26	•	•	Indicates the status of the software limit switch or fault alarm output.	–	–	–
Start DO test.	–	8.10.32.27	•	•	Starts function test of the software limit switch or fault alarm output.	–	–	–
Test mode	–	8.10.32.28	•	•	Test status reading	–	–	–
	Slot C.2	Slot D.2						
Terminal designation	–	8.10.33.1	•	•	Reading of the terminal designation	–	–	–
	Slot C.3	Slot D.3						
Terminal designation	–	8.10.34.1	•	•	Reading of the terminal designation	–	–	–

Option module Z3799-xxx21 [F]: Inductive limit switches and forced venting

Menu	Display reading	Display reading	On-site: write	Diagnostics	Adjustment range/values [default setting]/description	Reset		
						Initialization	Standard	Advanced
	Slot C.1	Slot D.1						
Terminal designation	–	8.10.32.1	•	•	Reading of the terminal designation	–	–	–
	Slot C.2	Slot D.2						
Terminal designation	–	8.10.33.1	•	•	Reading of the terminal designation	–	–	–
	Slot C.3	Slot D.3						
Terminal designation	–	8.10.34.1	•	•	Reading of the terminal designation	–	–	–

Option module Z3799-xxx30 [M]: Mechanical limit switches

Menu	Display reading	Display reading	On-site: write	Diagnostics	Adjustment range/values [default setting]/description	Reset		
						Initialization	Standard	Advanced
	Slot C.1	Slot D.1						
Terminal designation	–	8.10.32.1	•	•	Reading of the terminal designation	–	–	–
	Slot C.2	Slot D.2						
Terminal designation	–	8.10.33.1	•	•	Reading of the terminal designation	–	–	–
	Slot C.3	Slot D.3						
Terminal designation	–	8.10.34.1	•	•	Reading of the terminal designation	–	–	–

Option module Z3799-xxx40 [T]: Position transmitter, binary input (24 V) and binary output (NAMUR)

Menu	Display reading	Display reading	On-site: write	Diagnostics	Adjustment range/values [default setting]/description	Reset		
						Initialization	Standard	Advanced
	Slot C.1	Slot D.1						
Terminal designation	8.10.22.1	8.10.32.1	•	•	Reading of the terminal designation	–	–	–
Function	8.10.22.66	8.10.32.66	•	•	Position transmitter	–	•	–
Position transmitter's direction of action	8.10.22.67	8.10.32.67	•	•	➔ Increasing/increasing, Increasing/decreasing Assignment between travel/angle position and output of the position transmitter (4 to 20 mA signal range)	–	•	–
Error message at position transmitter	8.10.22.68	8.10.32.68	•	•	➔ [None], High, Low Selects whether and how errors are to be indicated by the position transmitter output.	–	•	–
Signal of analog output	8.11.22.69	8.11.32.69	•	•	Indicates the position transmitter signal in % based on the 0 to 20 mA signal range.	–	•	–
Start AO test.	8.10.22.69	8.10.32.69	•	•	Starts the function test of the position transmitter	–	–	–

Menu	Display reading	Display reading	On-site: write	Diagnostics	Adjustment range/values [default setting]/description	Reset		
						Initialization	Standard	Advanced
Test signal of analog output	8.10.22.71	8.10.32.71	•	•	➔ –10 to 110 % [0 %] Test signal to perform the position transmitter test based on the 4 to 20 mA signal range	–	–	–
Test mode	8.10.22.72	8.10.32.72	•	•	Test status reading	–	–	–
	Slot C.2	Slot D.2						
Terminal designation	8.10.23.1	8.10.33.1	•	•	Reading of the terminal designation	–	–	–
Function	8.10.23.2	8.10.33.2	•	•	Binary input 24 V	–	•	–
Action upon active binary input	8.10.23.4	8.10.33.4	•	•	➔ [Switching state], On-site write protection, Start PST, Start FST, Move valve to fixed value Selects the action to be triggered by the edge control of the binary input.	–	•	–
Fixed value over binary input	8.10.23.5	8.10.33.5	•	•	➔ **–25 to 100 % [100 %]** Enter the valve position that the valve is to move to when the binary input is active. **Note:** only 'Action upon active binary input' = 'Move valve to fixed value'	–	•	–
Edge control	8.10.23.6	8.10.33.6	•	•	➔ [Active: switch closed], Active: switch open Selects the state in which the action is to be triggered.	–	•	–
Current state	8.10.23.7	8.10.33.7	•	•	Status reading of the binary input	–	–	–
	Slot C.3	Slot D.3						
Terminal designation	8.10.24.1	8.10.34.1	•	•	Reading of the terminal designation	–	–	–
Function	8.10.24.20	8.10.34.20	•	•	➔ [Software limit switch], Fault alarm output Select the function: – Software limit switch: Indicates limit violation (above and below limit) – Fault alarm output: indicates existing error messages with 'Failure' status classification and condensed state according to 'Error message in case of … condensed state' message.	–	•	–

Menu	Display reading	Display reading	On-site: write	Diagnostics	Adjustment range/values [default setting]/description	Reset		
						Initialization	Standard	Advanced
Mode	8.10.24.21	8.10.34.21	•	•	➔ [Above limit], Below limit Determines whether the software limit switch is to be activated when the value exceeds or falls below the adjusted limit. **Note:** only when 'Function' = 'Software limit switch'	–	•	–
Edge control	8.10.24.22	8.10.34.22	•	•	➔ [Conducting/high], Non-conducting/low Determines in which state the software limit switch or fault alarm output is active.	–	•	–
Error message in case of 'Function check' condensed state	–	–	–	•	➔ [Yes], No Selects whether error messages with the 'Function check' condensed state are indicated over the fault alarm output. **Note:** only when 'Function' = 'Fault alarm output'	–	•	–
Error message in case of 'Maintenance required' and 'Out of specification' condensed states	–	–	–	•	➔ [Yes], No Selects whether error messages with the 'Maintenance required' and 'Out of specification' condensed states are indicated over the fault alarm output. **Note:** only when 'Function' = 'Fault alarm output'	–	•	–
Limit	8.10.24.25	8.10.34.25	•	•	➔ –20 to 120 % [98 %] Limit for the response of the software limit switch **Note:** only when 'Function' = 'Software limit switch'	–	•	–
Current state	8.10.24.26	8.10.34.26	•	•	Indicates the status of the software limit switch or fault alarm output.	–	–	–
Start DO test.	8.10.24.27	8.10.34.27	•	•	Starts function test of the software limit switch or fault alarm output.	–	–	–
Test mode	8.10.24.28	8.10.34.28	•	•	Test status reading	–	–	–

Option module Z3799-xxx50 [E]: external position sensor I

Menu	Display reading	Display reading	On-site: write	Diagnostics	Adjustment range/values [default setting]/description	Reset		
						Initialization	Standard	Advanced
	Slot C.1	Slot D.1						
Terminal designation	–	8.10.32.1	•	•	Reading of the terminal designation	–	–	–
Function	–	8.10.32.2	•	•	External position sensor	–	–	–
Analog input signal	–	8.10.32.41	•	•	Reading of the analog input signal in %	–	–	–
Filter analog input	–	8.10.32.43	•	•	➔ No filter, [50 Hz filter], 60 Hz filter Activate/deactivate the software filter to suppress measuring signal interference	–	•	–

Option module Z3799-xxx60 [Y]: External position sensor II (4 to 20 mA) and binary output (NAMUR)

Menu	Display reading	Display reading	On-site: write	Diagnostics	Adjustment range/values [default setting]/description	Reset		
						Initialization	Standard	Advanced
	Slot C.1	Slot D.1						
Terminal designation	–	8.10.32.1	•	•	Reading of the terminal designation	–	–	–
Function	–	8.10.32.2	•	•	External position sensor	–	–	–
Analog input signal	–	8.10.32.41	•	•	Reading of the analog input signal in %	–	–	–
Analog input signal	–	8.10.32.42	•	•	Reading of the analog input signal in mA	–	–	–
Filter analog input	–	8.10.32.43	•	•	➔ No filter, [50 Hz filter], 60 Hz filter Activate/deactivate the software filter to suppress measuring signal interference	–	•	–

Menu	Display reading	Display reading	On-site: write	Diagnostics	Adjustment range/values [default setting]/description	Reset		
						Initialization	Standard	Advanced
	Slot C.3	Slot D.3						
Terminal designation	–	8.10.34.1	•	•	Reading of the terminal designation	–	–	–
Function	–	8.10.34.20	•	•	➔ [Software limit switch], Fault alarm output Select the function: – Software limit switch: Indicates limit violation (above and below limit) – Fault alarm output: indicates existing error messages with 'Failure' status classification and condensed state according to 'Error message in case of … condensed state' message.	–	•	–
Mode	–	8.10.34.21	•	•	➔ [Above limit], Below limit Determines whether the software limit switch is to be activated when the value exceeds or falls below the adjusted limit. **Note:** only when 'Function' = 'Software limit switch'	–	•	–
Edge control	–	8.10.34.22	•	•	➔ [Conducting/high], Non-conducting/low Determines in which state the software limit switch or fault alarm output is active.	–	•	–
Error message in case of 'Function check' condensed state	–	–	–	•	➔ [Yes], No Selects whether error messages with the 'Function check' condensed state are indicated over the fault alarm output. **Note:** only when 'Function' = 'Fault alarm output'	–	•	–
Error message in case of 'Maintenance required' and 'Out of specification' condensed states	–	–	–	•	➔ [Yes], No Selects whether error messages with the 'Maintenance required' and 'Out of specification' condensed states are indicated over the fault alarm output. **Note:** only when 'Function' = 'Fault alarm output'	–	•	–

Menu	Display reading	Display reading	On-site: write	Diagnostics	Adjustment range/values [default setting]/description	Reset		
						Initialization	Standard	Advanced
Limit	–	8.10.34.25	•	•	➔ –20 to 120 % [98 %] Limit for the response of the software limit switch **Note:** only when 'Function' = 'Software limit switch'	–	•	–
Current state	–	8.10.34.26	•	•	Indicates the status of the software limit switch or fault alarm output.	–	–	–
Start DO test.	–	8.10.34.27	•	•	Starts function test of the software limit switch or fault alarm output.	–	–	–
Test mode	–	8.10.34.28	•	•	Test status reading	–	–	–

Option module Z3799-xxx65 [U]: Binary input (contact), binary input (24 V) and binary output (NAMUR)

Menu	Display reading	Display reading	On-site: write	Diagnostics	Adjustment range/values [default setting]/description	Reset		
						Initialization	Standard	Advanced
	Slot C.1	Slot D.1						
Terminal designation	8.10.22.1	8.10.32.1	•	•	Reading of the terminal designation	–	–	–
Function	8.10.22.2	8.10.32.2	•	•	Binary input (contact)	–	–	–
Action upon active binary input	8.10.22.4	8.10.32.4	•	•	➔ [Switching state], On-site write protection, Start PST, Start FST, Move valve to fixed value Selects the action to be triggered by the edge control of the binary input.	–	•	–
Edge control	8.10.22.6	8.10.32.6	•	•	➔ [Active: switch closed], Active: switch open Selects the state in which the action is to be triggered.	–	•	–
Current state	8.10.22.7	8.10.32.7	•	•	Status reading of the binary input	–	–	–
	Slot C.2	Slot D.2						
Terminal designation	8.10.23.1	8.10.33.1	•	•	Reading of the terminal designation	–	–	–

Menu	Display reading	Display reading	On-site: write	Diagnostics	Adjustment range/values [default setting]/description	Reset		
						Initialization	Standard	Advanced
Function	8.10.23.2	8.10.33.2	•	•	Binary input (24 V)	–	•	–
Action upon active binary input	8.10.23.4	8.10.33.4	•	•	➔ [Switching state], On-site write protection, Start PST, Start FST, Move valve to fixed value Selects the action to be triggered by the edge control of the binary input.	–	•	–
Edge control	8.10.23.6	8.10.33.6	•	•	➔ [Active: switch closed], Active: switch open Selects the state in which the action is to be triggered.	–	•	–
Current state	8.10.23.7	8.10.33.7	•	•	Status reading of the binary input	–	–	–
	Slot C.3	Slot D.3						
Terminal designation	8.10.24.1	8.10.34.1	•	•	Reading of the terminal designation	–	–	–
Function	8.10.24.20	8.10.34.20	•	•	➔ [Software limit switch], Fault alarm output Select the function: – Software limit switch: Indicates limit violation (above and below limit) – Fault alarm output: indicates existing error messages with 'Failure' status classification and condensed state according to 'Error message in case of … condensed state' message.	–	•	–
Mode	8.10.24.21	8.10.34.21	•	•	➔ [Above limit], Below limit Determines whether the software limit switch is to be activated when the value exceeds or falls below the adjusted limit. **Note:** only when 'Function' = 'Software limit switch'	–	•	–
Edge control	8.10.24.22	8.10.34.22	•	•	➔ [Conducting/high], Non-conducting/low Determines in which state the software limit switch or fault alarm output is active.	–	•	–

Menu	Display reading	Display reading	On-site: write	Diagnostics	Adjustment range/values [default setting]/description	Reset		
						Initialization	Standard	Advanced
Error message in case of 'Function check' condensed state	–	–	–	•	➔ [Yes], No Selects whether error messages with the 'Function check' condensed state are indicated over the fault alarm output. **Note:** only when 'Function' = 'Fault alarm output'	–	•	–
Error message in case of 'Maintenance required' and 'Out of specification' condensed states	–	–	–	•	➔ [Yes], No Selects whether error messages with the 'Maintenance required' and 'Out of specification' condensed states are indicated over the fault alarm output. **Note:** only when 'Function' = 'Fault alarm output'	–	•	–
Limit	8.10.24.25	8.10.34.25	•	•	➔ –20 to 120 % [98 %] Limit for the response of the software limit switch **Note:** only when 'Function' = 'Software limit switch'	–	•	–
Current state	8.10.24.26	8.10.34.26	•	•	Indicates the status of the software limit switch or fault alarm output.	–	–	–
Start DO test.	8.10.24.27	8.10.34.27	•	•	Starts function test of the software limit switch or fault alarm output.	–	–	–
Test mode	8.10.24.28	8.10.34.28	•	•	Test status reading	–	–	–

Option module Z3799-xxx80 [V]: Forced venting, binary input (24 V) and binary output (NAMUR)

Menu	Display reading	Display reading	On-site: write	Diagnostics	Adjustment range/values [default setting]/description	Reset		
						Initialization	Standard	Advanced
	Slot C.1	Slot D.1						
Terminal designation	8.10.22.1	8.10.32.1	•	•	Reading of the terminal designation	–	–	–
	Slot C.2	Slot D.2						
Terminal designation	8.10.23.1	8.10.33.1	•	•	Reading of the terminal designation	–	–	–

Menu	Display reading	Display reading	On-site: write	Diagnostics	Adjustment range/values [default setting]/description	Reset		
						Initialization	Standard	Advanced
Function	8.10.23.2	8.10.33.2	•	•	Binary input (24 V)	–	–	–
Action upon active binary input	8.10.23.4	8.10.33.4	•	•	➔ [Switching state], On-site write protection, Start PST, Start FST, Move valve to fixed value Selects the action to be triggered by the edge control of the binary input.	–	•	–
Edge control	8.10.23.6	8.10.33.6	•	•	➔ [Active: switch closed], Active: switch open Selects the state in which the action is to be triggered.	–	•	–
Current state	8.10.23.7	8.10.33.7	•	•	Status reading of the binary input	–	–	–
Current state	8.10.23.7		•	•	Reading: Not active/Active	–	–	–
	Slot C.3	Slot D.3						
Terminal designation	8.10.24.1	8.10.34.1	•	•	Reading of the terminal designation	–	–	–
Function	8.10.24.20	8.10.34.20	•	•	➔ [Software limit switch], Fault alarm output Select the function: – Software limit switch: Indicates limit violation (above and below limit) – Fault alarm output: indicates existing error messages with 'Failure' status classification and condensed state according to 'Error message in case of … condensed state' message.	–	•	–
Mode	8.10.24.21	8.10.34.21	•	•	➔ [Above limit], Below limit Determines whether the software limit switch is to be activated when the value exceeds or falls below the adjusted limit. **Note:** only when 'Function' = 'Software limit switch'	–	•	–
Edge control	8.10.24.22	8.10.34.22	•	•	➔ [Conducting/high], Non-conducting/low Determines in which state the software limit switch or fault alarm output is active.	–	•	–

Menu	Display reading	Display reading	On-site: write	Diagnostics	Adjustment range/values [default setting]/description	Reset		
						Initialization	Standard	Advanced
Error message in case of 'Function check' condensed state	–	–	–	•	➔ [Yes], No Selects whether error messages with the 'Function check' condensed state are indicated over the fault alarm output. **Note:** only when 'Function' = 'Fault alarm output'	–	•	–
Error message in case of 'Maintenance required' and 'Out of specification' condensed states	–	–	–	•	➔ [Yes], No Selects whether error messages with the 'Maintenance required' and 'Out of specification' condensed states are indicated over the fault alarm output. **Note:** only when 'Function' = 'Fault alarm output'	–	•	–
Limit	8.10.24.25	8.10.34.25	•	•	➔ –20 to 120 % [98 %] Limit for the response of the software limit switch **Note:** only when 'Function' = 'Software limit switch'	–	•	–
Current state	8.10.24.26	8.10.34.26	•	•	Indicates the status of the software limit switch or fault alarm output.	–	–	–
Start DO test.	8.10.24.27	8.10.34.27	•	•	Starts function test of the software limit switch or fault alarm output.	–	–	–
Test mode	8.10.24.28	8.10.34.28	•	•	Test status reading	–	–	–

Option module Z3799-xxx90 [A]: Analog input and binary output (NAMUR)

Menu	Display reading	Display reading	On-site: write	Diagnostics	Adjustment range/values [default setting]/description	Reset		
						Initialization	Standard	Advanced
	Slot C.1	Slot D.1						
Terminal designation	–	8.10.32.1	•	•	Reading of the terminal designation	–	–	–
Function	–	8.10.32.2	•	•	4 to 20 mA analog input	–	–	–
Analog input signal	–	8.10.32.41	•	•	Reading of the analog input signal in %	–	•	–

Menu	Display reading	Display reading	On-site: write	Diagnostics	Adjustment range/values [default setting]/description	Reset		
						Initialization	Standard	Advanced
Analog input signal	–	8.10.32.42	•	•	Reading of the analog input signal in mA	–	•	–
Filter analog input	–	8.10.32.43	•	•	➔ No filter, [50 Hz filter], 60 Hz filter Activate/deactivate the software filter to suppress measuring signal interference	–	•	–
	Slot C.3	Slot D.3						
Terminal designation	–	8.10.34.1	•	•	Reading of the terminal designation	–	–	–
Function	–	8.10.34.20	•	•	➔ [Software limit switch], Fault alarm output Select the function: – Software limit switch: Indicates limit violation (above and below limit) – Fault alarm output: indicates existing error messages with 'Failure' status classification and condensed state according to 'Error message in case of … condensed state' message.	–	•	–
Mode	–	8.10.34.21	•	•	➔ [Above limit], Below limit Determines whether the software limit switch is to be activated when the value exceeds or falls below the adjusted limit. **Note:** only when 'Function' = 'Software limit switch'	–	•	–
Edge control	–	8.10.34.22	•	•	➔ [Conducting/high], Non-conducting/low Determines in which state the software limit switch or fault alarm output is active.	–	•	–
Error message in case of 'Function check' condensed state	–	–	–	•	➔ [Yes], No Selects whether error messages with the 'Function check' condensed state are indicated over the fault alarm output. **Note:** only when 'Function' = 'Fault alarm output'	–	•	–

Menu	Display reading	Display reading	On-site: write	Diagnostics	Adjustment range/values [default setting]/description	Reset		
						Initialization	Standard	Advanced
Error message in case of 'Maintenance required' and 'Out of specification' condensed states	–	–	–	•	➔ [Yes], No Selects whether error messages with the 'Maintenance required' and 'Out of specification' condensed states are indicated over the fault alarm output. **Note:** only when 'Function' = 'Fault alarm output'	–	•	–
Limit	–	8.10.34.25	•	•	➔ –20 to 120 % [98 %] Limit for the response of the software limit switch **Note:** only when 'Function' = 'Software limit switch'	–	•	–
Current state	–	8.10.34.26	•	•	Indicates the status of the software limit switch or fault alarm output.	–	–	–
Start DO test.	–	8.10.34.27	•	•	Starts function test of the software limit switch or fault alarm output.	–	–	–
Test mode	–	8.10.34.28	•	•	Test status reading	–	–	–

16.2.2 Readable process data

Menu	Display reading	On-site: write	Diagnostics	Adjustment range/values [default setting]/ description	Reset		
					Initialization	Standard	Advanced
Process data	**10**	•	•				
Valve position	10.1	•	•	Reading of valve position in %	–	–	–
Valve position	10.2	•	•	Reading of valve position in degrees	–	–	–
Set point	10.10	•	•	Reading of set point in %	–	–	–
Set point	–	–	•	Reading of set point in mA	–	–	–
Manual set point (MAN)	10.11	•	•	Reading of set point for manual mode (MAN) in %	–	–	–
Set point after filter	10.13	•	•	Reading of adjusted set point after set point processing (split range, tight-closing function etc.)	–	–	–

Menu	Display reading	On-site: write	Diagnostics	Adjustment range/values [default setting]/ description	Reset		
					Initialization	Standard	Advanced
Discrete valve position	–	–	•	Reading of discrete valve position (OPEN, CLOSED, intermediate position)	–	–	–
Fixed value (communication)	10.14	–	•	Reading of the fixed value transmitted over HART® communication	–	–	–
Fixed value (communication)	10.15	–	•	Indicates whether the fixed value transmitted over H is active or inactive.	–	•	•
Fixed value over binary input	10.16	–	•	Reading of the valve position (%) that the valve is to move to when the binary input is active.	–	•	•
Fixed value over binary input	10.17	–	•	Indicates whether the binary input is active or inactive.	–	•	•
Set point deviation	10.30	•	•	Reading of set point deviation in %	–	•	•
Current operating mode	10.35	•	•	Indicates current operating mode	–	–	–
Reason for fail-safe position	10.38	•	•	Reason why the positioner has moved to the fail-safe position.	–	–	–
OUTPUT 138: pressure	10.45	•	•	Pressure reading in bar at the positioner's output 138	–	–	–
OUTPUT 238: pressure	10.46	•	•	Pressure reading in bar at the positioner's output 238	–	–	–
Supply pressure	10.47	•	•	Reading of supply pressure in bar at the input (supply 9)	–	–	–
Temperature inside device	10.55	•	•	Reading of the temperature inside device in °C	–	–	–

16.2.3 Diagnosis/maintenance

Menu	Display reading	On-site: write	Diagnostics	Adjustment range/values [default setting]/ description		Reset: Initialization	Reset: Standard	Reset: Advanced
Diagnosis/maintenance	**12**	•	•					
Configuration	**12.1**	•	•					
Lower press. limit	–	–	•	➔ 0.10 to 10.00 bar [2.50 bar] Enter the limit for the 'Low supply pressure' status message. The value is automatically adapted during the recording of the valve signature. It can be changed afterwards.		•	–	–
Stem seal	–	–	•	➔ Self-adjusting, Adjustable, Bellows, Other, [Not selected] Indicates the stem seal used in the valve. This parameter is important to evaluate the total valve travel (statistical information).		–	•	–
Total valve travel limit x 1000	12.1.20	•	•	The 'Total valve travel' status message is generated when the total valve travel exceeds the limit.		–	•	•
Lag time for set point deviation	12.1.30	•	•	Reading in s. The lag time is determined during initialization. It is the criterion to generate the 'Set point deviation' status message.		–	•	•
Tolerance band for set point deviation +/-	12.1.31	•	•	Used for error monitoring. A set point deviation is recognized as a system deviation when the valve position deviates from the set point by the value adjusted in this parameter.		–	•	•
Log all classifications	–	–	•	Select whether all status messages (including 'No message' status) are logged or not.		–	–	•
Status classification	–	–	•	See the 'Malfunction' chapter for details.				
Condensed state	–	–	•	[Highest classification]	➔ No message, Maintenance required, Out of specification, Function check, Failure, Highest classification Further details can be found in ▶ EB 8389-2.	–	–	•
Start-up	–	–	•	[Highest classification]		–	–	•
Initialization	–	–	•	[Highest classification]		–	–	•
Init: incorrect operating mode	–	–	•	[No message]		–	–	•
Init: travel too small	–	–	•	[Maintenance required]		–	–	•
Init: rated travel not achieved	–	–	•	[Maintenance required]		–	–	•
Init: no movement	–	–	•	[Maintenance required]		–	–	•
Init: pin position	–	–	•	[Maintenance required]		–	–	•

Menu	Display reading	On-site: write	Diagnostics	Adjustment range/values [default setting]/ description		Reset		
						Initialization	Standard	Advanced
Init: canceled (control accuracy)	–	–	•	[Highest classification]	➔ No message, Maintenance required, Out of specification, Function check, Failure, Highest classification Further details can be found in ▶ EB 8389-2.	–	–	•
Init: low control accuracy	–	–	•	[Highest classification]		–	–	•
Init: positioner not initialized	–	–	•	[Out of specification]		–	–	•
Init: canceled externally	–	–	•	[Maintenance required]		–	–	•
Init: angle limitation	–	–	•	[Highest classification]		–	–	•
Init: timeout	–	–	•	[Highest classification]		–	–	•
Zero calibration error	–	–	•	[Highest classification]		–	–	•
Timeout for detection of zero	–	–	•	[Maintenance required]		–	–	•
Zero calibration: shift >>	–	–	•	[Maintenance required]		–	–	•
Configuration	–	–	•	[Highest classification]		–	–	•
P3799: combination invalid	–	–	•	[Failure]		–	–	•
No pneumatic module	–	–	•	[Failure]		–	–	•
Pressure sensors failed	–	–	•	[Maintenance required]		–	–	•
Z3799: combination invalid	–	–	•	[Maintenance required]		–	–	•
Forced venting switch incorrect	–	–	•	[Failure]		–	–	•
Slot C.1: binary input active	–	–	•	[No message]		–	–	•
Slot C.2: binary input active	–	–	•	[No message]		–	–	•
Slot C.3: binary input active	–	–	•	[No message]		–	–	•
Slot D.1: binary input active	–	–	•	[No message]		–	–	•
Slot D.2: binary input active	–	–	•	[No message]		–	–	•

Menu	Display reading	On-site: write	Diagnostics	Adjustment range/values [default setting]/ description		Reset		
						Initialization	Standard	Advanced
Slot D.3: binary input active	–	–	•	[No message]		–	–	•
External position sensor error	–	–	•	[Maintenance required]		–	–	•
Process data	–	–	•	[Highest classification]		–	–	•
Operating mode not AUTO	–	–	•	[No message]		–	–	•
Forced venting function	–	–	•	[Failure]		–	–	•
Test in progress	–	–	•	[Function check]		–	–	•
Emergency mode active	–	–	•	[Maintenance required]		–	–	•
Fail-in-place module	–	–	•	[No message]		–	–	•
Control valve diagnosis	–	–	•	[Highest classification]	➔ No message, Maintenance required, Out of specification, Function check, Failure, Highest classification	–	–	•
Friction change (open pos.)	–	–	•	[No message]		–	–	•
Friction change (mid-pos.)	–	–	•	[No message]		–	–	•
Friction change (closed pos.)	–	–	•	[No message]		–	–	•
Valve signature recording failed	–	–	•	[Maintenance required]	Further details can be found in ▶ EB 8389-2.	–	–	•
No supply pressure	–	–	•	[Out of specification]		–	–	•
Low supply pressure	–	–	•	[Maintenance required]		–	–	•
Supply pressure > 10 bar	–	–	•	[Out of specification]		–	–	•
PST	–	–	•	[Highest classification]		–	–	•
PST: cancellation criteria met	–	–	•	[Maintenance required]		–	–	•
PST: start criteria not met	–	–	•	[No message]		–	–	•
FST	–	–	•	[Highest classification]		–	–	•
FST: cancellation criteria met	–	–	•	[Maintenance required]		–	–	•
FST: start criteria not met	–	–	•	[No message]		–	–	•

Menu	Display reading	On-site: write	Diagnostics	Adjustment range/values [default setting]/ description		Reset		
						Initialization	Standard	Advanced
Pneumatic module A (P3799 A)	–	–	•	[Highest classification]		–	–	•
P3799: failure	–	–	•	[Highest classification]		–	–	•

Menu	Display reading	On-site: write	Diagnostics	Adjustment range/values [default setting]/ description		Reset		
						Initialization	Standard	Advanced
P3799: movement impaired	–	–	•	[Highest classification]	➔ No message, Maintenance required, Out of specification, Function check, Failure, Highest classification Further details can be found in ▶ EB 8389-2.	–	–	•
P3799: maintenance required	–	–	•	[Highest classification]		–	–	•
P3799: initialization error	–	–	•	[Highest classification]		–	–	•
Pneumatic module B (P3799 B)	–	–	•	[Highest classification]		–	–	•
P3799: failure	–	–	•	[Highest classification]		–	–	•
P3799: movement impaired	–	–	•	[Highest classification]		–	–	•
P3799: maintenance required	–	–	•	[Highest classification]		–	–	•
P3799: initialization error	–	–	•	[Highest classification]		–	–	•
AMR signal outside range	–	–	•	[Maintenance required]		–	–	•
Hardware fault	–	–	•	[Highest classification]		–	–	•
Limit for total valve travel exceeded	–	–	•	[Maintenance required]		–	–	•
Lower end position shifted	–	–	•	[Maintenance required]		–	–	•
Upper end position shifted	–	–	•	[Maintenance required]		–	–	•
Dynamic stress factor exceeded	–	–	•	[Maintenance required]		–	–	•
Set point deviation	–	–	•	[Maintenance required]		–	–	•
Brownout	–	–	•	[Maintenance required]		–	–	•
Current too low	–	–	•	[Out of specification]		–	–	•
IP shutdown	–	–	•	[No message]		–	–	•
Current too high	–	–	•	[Out of specification]		–	–	•
Angle limitation	–	–	•	[Highest classification]		–	–	•
Temperature inside device below min. limit	–	–	•	[Out of specification]		–	–	•

Menu	Display reading	On-site: write	Diagnostics	Adjustment range/values [default setting]/ description		Reset		
						Initialization	Standard	Advanced
Temperature inside device above max. limit	–	–	•	[Out of specification]	➔ No message, Maintenance required, Out of specification, Function check, Failure, Highest classification Further details can be found in ▶ EB 8389-2.	–	–	•
Logging suspended	–	–	•	[Maintenance required]		–	–	•
Operating range in CLOSED position	–	–	•	[No message]		–	–	•
Operating range in max. OPEN position	–	–	•	[No message]		–	–	•
Operating range shifting towards CLOSED position	–	–	•	[No message]		–	–	•
Operating range shifting towards max. OPEN position	–	–	•	[No message]		–	–	•
Limited working range: lower range	–	–	•	[No message]		–	–	•
Limited working range: upper range	–	–	•	[No message]				
Fail-in-place modules	–	–	•	[Failure]				
Device state	**12.3**	•	•					
Status messages	**12.3.2**	•	•	Messages which may be displayed: see Chapter 16.2.4				
Logging	–	–	•					
OUTPUT 138: pressure	12.3.16	•	•	Pressure reading in bar at the positioner's output 138		–	•	•
OUTPUT 238: pressure	12.3.17	•	•	Pressure reading in bar at the positioner's output 238		–	•	•
Supply pressure	12.3.18	•	•	Reading of supply pressure in bar at the input (supply 9)		–	•	•
Min. supply pressure	–	–	•	Reading of the lowest measured supply pressure		–	•	•
Time stamp of min. supply pressure	–	–	•	Time when the lowest measured supply pressure occurred.		–	•	•
Max. supply pressure	–	–	•	Reading of the highest measured supply pressure		–	•	•
Time stamp of max. supply pressure	–	–	•	Time when the highest measured supply pressure occurred.		–	•	•
Dynamic stress factor	–	–	•	Indicates the stress of the bellows and/or packing.		–	•	•
Total valve travel	12.3.40	•		Totaled full valve travel cycle		–	•	•

Menu	Display reading	On-site: write	Diagnostics	Adjustment range/values [default setting]/ description	Reset		
					Initialization	Standard	Advanced
Temperature inside device	–	–	•	Reading of the temperature inside the positioner	–	•	•
Max. temperature inside device	12.3.50	•		Reading in °C For error monitoring after the temperature exceeds the permissible ambient temperatures. **Note: This** parameter can be found in the [Temperature] folder in the 'Diagnosis' user level.	•	–	•
Min. temperature inside device	12.3.52	•		Reading in °C For error monitoring after the temperature falls below the permissible ambient temperatures. **Note: This** parameter can be found in the [Temperature] folder in the 'Diagnosis' user level.	•	–	•
Min. temperature limit	–	–	•	Enter the temperature limit for the 'Min. temperature limit' status message. **Note: This** parameter can be found in the [Temperature] folder.	•	–	•
Max. temperature limit	–	–	•	Enter the temperature limit for the 'Max. temperature limit' status message. **Note: This** parameter can be found in the [Temperature] folder.	•	–	•
Operating hours counter	12.3.60	•	•	Reading in d:hh:mm:ss	–	–	–
Device switched on since initialization	–	–	•	Indicates how long the positioner has been switched on since the last initialization.	–	•	•
Device in closed-loop operation	–	–	•	Indicates how long the positioner has been in closed-loop operation.	–	•	•
Device in closed-loop operation since last initialization	–	–	•	Indicates how long the positioner has been in closed-loop operation since the last initialization.	–	•	•
Number of initializations	12.3.65	•	•	Number of successfully completed valve initializations	–	•	•
Number of zero calibrations	12.3.66	•	•	Number of performed zero calibrations	–	•	•
Statistical information	**12.5**	•	•				
Histograms							
Reset histograms	–	–	•	➔ Confirm to reset all histograms.	–	–	–

Menu	Display reading	On-site: write	Diagnostics	Adjustment range/values [default setting]/ description	Reset		
					Initialization	Standard	Advanced
Valve position	–	–	•	➔ Open folder to view the histogram. Details in the Operating Instructions for valve diagnostics ▶ EB 8389-2	–	–	–
Set point deviation	–	–	•	➔ Open folder to view the histogram. Details in the Operating Instructions for valve diagnostics ▶ EB 8389-2	–	–	–
Load cycle	–	–	•	➔ Open folder to view the histogram. Details in the Operating Instructions for valve diagnostics ▶ EB 8389-2	–	–	–
Course of end position	–	–	•		–	–	–
Threshold for end position shift	–	–	•	Enter the limit by how much the lower end position must change to generate the 'Course of lower end position' and 'Course of upper end position' status messages.	–	•	–
Course of lower end position	–	–	•		–	–	–
Time stamp	–	–	•	Time reading when the course of lower end position was recorded.	•	–	–
Temperature	–	–	•	Reading of the temperature inside the positioner while the course of lower end position was being recorded.	•	–	–
Course of upper end position	–	–	•		–	–	–
Time stamp	–	–	•	Time reading when the course of upper end position was recorded.	•	–	–
Temperature	–	–	•	Reading of the temperature inside the positioner while the course of upper end position was being recorded.	•	–	–
Course of supply pressure	–	–	•	**Note:** Data are only shown for positioners with pressure sensors.	–	–	–
New recording threshold for supply pressure	–	–	•	Enter the limit by how much the supply pressure must change to start recording the course of the supply pressure.	–	•	–
Time stamp	–	–	•	Time reading when the course of supply pressure was recorded.	•	–	–
Supply pressure during last initialization	–	–	•	Reading of the supply pressure recorded during the last initialization	•	–	–

Menu	Display reading	On-site: write	Diagnostics	Adjustment range/values [default setting]/ description	Reset		
					Initialization	Standard	Advanced
Reset course of supply pressure	–	–	•	➔ Confirm to reset the course of supply pressure.	–	–	–
Valve signature	**12.5.6**	•	•	**Note: Only** positioners with pressure sensors	–	–	–
Start recording of reference graphs	12.5.6.1	•	•	➔ Confirm to start recording of reference graphs.	–	–	–
Stop test	–	•	•	➔ Confirm to stop recording of reference graphs.	–	–	–
Valve signature status	–	–	•	Indicates whether the valve signature is valid or not.	–	–	–
Monitoring	–	–	•	➔ Open folder to view the graph. Details in the Operating Instructions for valve diagnostics ▶ EB 8389-2	–	–	–
Friction	–	–	•	➔ Open folder to view the graph. Details in the Operating Instructions for valve diagnostics ▶ EB 8389-2	–	–	–
Result of last valve signature	12.5.6.4	•	•	➔ Confirm to read the status of the last valve signature.	–	–	–
Time stamp	–	–	•	Time reading when the reference was recorded.	–	•	–
Detected lower bench range value	–	–	•	Reading of the signal pressure p_{out} at minimum supply	–	•	–
Detected upper bench range value	–	–	•	Reading of the signal pressure p_{out} at maximum supply	–	•	–
Min. hysteresis	–	–	•	Reading of the lowest possible hysteresis (minimum signal pressure difference in relation to the bench range)	–	•	–
Max. hysteresis	–	–	•	Reading of the highest possible hysteresis (maximum signal pressure difference in relation to the bench range)	–	•	–
Average hysteresis	–	–	•	Reading of the average hysteresis (average signal pressure difference in relation to the bench range)	–	•	–
Reset monitoring values	–	–	•	➔ Confirm to reset the monitoring values.	–	–	–
Tests	**12.8**	•	•				
Partial stroke test (PST)	**12.8.1**	•	•				
Start PST	12.8.1.1	•	•	➔ Confirm to start the test.	–	–	–
Stop test	–	•	•	➔ Confirm to stop the test.	–	–	–
Time until next test	–	–	•	Indicates how long until the next time-controlled PST starts.	–	–	–

Menu	Display reading	On-site: write	Diagnostics	Adjustment range/values [default setting]/ description	Reset		
					Initialization	Standard	Advanced
Result or Result of last test [1)]	12.8.1.5	•	•	➔ Confirm to read the status of the last partial stroke test (PST).	–	–	–
Test status	12.8.1.6	•	•	Indicates whether the test is active or inactive.	–	•	•
Number of successful tests	–	–	•	Indicates the number of successfully performed tests since the last test reset.	–	–	–
Number of canceled tests	–	–	•	Indicates the number of canceled tests since the last test reset.	–	–	–
Number of failed test criteria	–	–	•	Indicates the number of failed start criteria. The start criteria are determined in the 'Configuration' folder.	–	–	–
Canceled: x monitoring	12.8.1.10	•	•	Reading in %. Canceled when range is violated. **Note: This** parameter can be found in the 'Configuration' folder in the 'Diagnosis' user level.	–	–	–
Configuration	–	–	•	Details in the Operating Instructions for valve diagnostics ▶ EB 8389-2	–	•	•
Reports and graphs	–	–	•	Details in the Operating Instructions for valve diagnostics ▶ EB 8389-2	–	•	•
Full stroke test (FST)	**12.8.2**						
Start FST	112.8.2.1	•	•	➔ Confirm to start the test.	–	–	–
Stop test	–	•	•	➔ Confirm to stop the test.	–	–	–
Result or Result of last test [1)]	12.8.2.5	•	•	➔ Confirm to read the status of the last full stroke test (FST).	–	–	–
Test status	12.8.2.6	•	•	Indicates whether the test is active or inactive.	–	•	•
Number of successful tests	–	–	•	Indicates the number of successfully performed tests since the last test reset.	–	–	–
Number of canceled tests	–	–	•	Indicates the number of canceled tests since the last test reset.	–	–	–
Number of failed test criteria	–	–	•	Indicates the number of failed start criteria. The start criteria are determined in the 'Configuration' folder.	–	–	–
Configuration	–	–	•	Details in the Operating Instructions for valve diagnostics ▶ EB 8389-2	–	•	•
Reports and graphs	–	–	•	Details in the Operating Instructions for valve diagnostics ▶ EB 8389-2	–	•	•
Dead band	**12.8.3**						
Start dead band test	12.8.3.1	•	•	➔ Confirm to start the test.	–	–	–
Stop test	–	•	•	➔ Confirm to stop the test.	–	–	–

Menu	Display reading	On-site: write	Diagnostics	Adjustment range/values [default setting]/ description	Reset		
					Initialization	Standard	Advanced
Result or Result of last test [1]	12.8.3.5	•	•	➔ Confirm to read the status of the last dead band test.	–	–	–
Test status	–	•	•	Indicates whether the test is active or inactive.	–	–	–
Configuration	–	–	•	Details in the Operating Instructions for valve diagnostics ▶ EB 8389-2	–	•	•
Reports and graphs	–	–	•	Details in the Operating Instructions for valve diagnostics ▶ EB 8389-2	–	•	•
Valve signature	**12.8.4**			**Note: Only** positioners with pressure sensors			
Start repetition test	12.8.4.1	•	•	➔ Confirm to start the test.	–	–	–
Stop test	–	•	•	➔ Confirm to stop the test.	–	–	–
Result or Result of last valve signature [1]	12.8.4.5	•	•	➔ Confirm to read the status of the repetition test (valve signature).	–	–	–
Valve signature status	–	–	•	Indicates whether the valve signature is valid or not.	–	–	–
Reports and graphs	–	–	•	Details in the Operating Instructions for valve diagnostics ▶ EB 8389-2	–	•	•

[1] Different designations used in the SAMSON TROVIS-VIEW software and DD/DTM/EDD.

16.2.4 Diagnosis: status messages

Active status messages are also shown in the main display (display/numbering: 0.50). See Chapter 16.1.

Menu	Display reading	On-site: write	Diagnostics	Adjustment range/values [default setting]/ description	Reset		
					Initialization	Standard	Advanced
Diagnosis/ maintenance	**10**	•	•				
Device state	**10.1**	•	•				
Status messages	**10.1.1**	•	•				
Condensed state	10.1.1.1	•	•	Status indicators	–	–	–

Menu	Display reading	On-site: write	Diagnostics	Adjustment range/values [default setting]/ description	Reset		
					Initialization	Standard	Advanced
Start-up	10.1.1.2	–	•	Status indicators	–	–	–
Initialization error	10.1.1.3	• 1)	•	Status indicators	–	–	–
Incorrect operating mode or Init: incorrect operating mode 2)	10.1.1.4	• 1)	•	The incorrect operating mode is set.	–	–	–
	10.1.1.5	• 1)	–	➔ Confirm to clear message.	–	–	–
Travel too small or Init: travel too small 2)	10.1.1.6	• 1)	•	The determined travel is below the limit.	–	–	–
	10.1.1.7	• 1)	–	Confirm to clear message.	–	–	–
Rated travel not achieved or Init: rated travel not achieved 2)	10.1.1.8	• 1)	•	The detected rated travel is smaller than the value in the setting.	–	–	–
	10.1.1.9	• 1)	–	➔ Confirm to clear message.	–	–	–
No movement or Init: no movement 2)	10.1.1.10	• 1)	•	Possible cause: valve blockage.	–	–	–
	10.1.1.11	• 1)	–	➔ Confirm to clear message.	–	–	–
Pin position or Init: pin position 2)	10.1.1.12	• 1)	•	The adjusted pin position does not match the rated travel.	–	–	–
	10.1.1.13	• 1)	–	➔ Confirm to clear message.	–	–	–
Canceled (control accuracy) or Init: canceled (control accuracy) 2)	10.1.1.14	• 1)	•	Control criteria are not fulfilled.	–	–	–
	10.1.1.15	• 1)	–	➔ Confirm to clear message.	–	–	–
Low control accuracy or Init: low control accuracy 2)	10.1.1.16	• 1)	•	Control criteria are not fulfilled. The positioner remains ready for use.	–	–	–
	10.1.1.17	• 1)	–	➔ Confirm to clear message.	–	–	–
Positioner not initialized or Init: positioner not initialized 2)	10.1.1.18	• 1)	•	The positioner needs to be initialized.	–	–	–
Initialization canceled (external) or Init: canceled externally 2)	10.1.1.19	• 1)	•	Initialization was canceled, e.g. due to forced venting or IP shutdown.	–	–	–
	10.1.1.20	• 1)	–	➔ Confirm to clear message.	–	–	–
Angle limitation or Init: angle limitation 2)	10.1.1.21	• 1)	•	The maximum permissible angle of rotation (±30°) has been exceeded.	–	–	–
	10.1.1.22	• 1)	–	➔ Confirm to clear message.	–	–	–

Menu	Display reading	On-site: write	Diagnostics	Adjustment range/values [default setting]/ description	Reset		
					Initialization	Standard	Advanced
Timeout or Init: timeout [2]	10.1.1.23	• [1]	•	Initialization takes too long. Possible cause: valve blockage.	–	–	–
	10.1.1.24	• [1]	–	➔ Confirm to clear message.	–	–	–
Zero calibration error	10.1.1.25	• [1]	•	Initialization takes too long. Possible cause: valve blockage.	–	–	–
Timeout for detection of zero	10.1.1.26	• [1]	•	Zero calibration takes too long. Possible cause: no supply pressure or actuator/ plug stem blocked.	–	–	–
	10.1.1.27	• [1]	–	➔ Confirm to clear message.	–	–	–
Zero calibration: shift >>	10.1.1.28	• [1]	•	Zero has shifted. Possible cause: wear at the seat and plug.	–	–	–
Configuration	10.1.1.29	• [1]	•	Status indicators	–	–	–
P3799: combination or P3799: invalid combination [2]	10.1.1.30	• [1]	•	Impermissible combination of pneumatic modules (see the 'Start-up and configuration' chapter)	–	–	–
No pneumatic module	10.1.1.31	• [1]	•	Message when no pneumatic module has been inserted (at least one pneumatic module must be inserted).	–	–	–
Pressure sensor failure	10.1.1.32	• [1]	•	No more communication with pressure sensors. Defective pressure sensors.	–	–	–
	10.1.1.33	• [1]	•	➔ Confirm to clear message.	–	–	–
Combination Z3799 or Z3799: invalid combination	10.1.1.34	• [1]	•	The identical option module has been inserted into slot C and D.	–	–	–
Forced venting switch incorrect	10.1.1.35	• [1]	•	Forced venting switch is not set correctly (see the 'Start-up and configuration' chapter).	–	–	–
Slot C.1: binary input active	10.1.1.36	• [1]	•	State is active.	–	–	–
Slot C.2: binary input active	10.1.1.37	• [1]	•	State is active.	–	–	–
Slot C.3: binary input active	10.1.1.38	• [1]	•	State is active.	–	–	–
Slot D.1: binary input active	10.1.1.39	• [1]	•	State is active.	–	–	–
Slot D.2: binary input active	10.1.1.40	• [1]	•	State is active.	–	–	–

Menu	Display reading	On-site: write	Diagnostics	Adjustment range/values [default setting]/ description	Reset		
					Initialization	Standard	Advanced
Slot D.3: binary input active	10.1.1.41	• 1)	•	State is active.	–	–	–
External position sensor error	10.1.1.42	• 1)	•	Status indicators	–	–	–
Process data	10.1.1.43	• 1)	•	Status indicators	–	–	–
Operating mode not AUTO	10.1.1.44	• 1)	•	Current operating mode is not AUTO.	–	–	–
Forced venting function	10.1.1.45	• 1)	•	Forced venting is active.	–	–	–
Test in progress	10.1.1.46	• 1)	•	A test is being performed.	–	–	–
Emergency mode active	10.1.1.47	• 1)	•	Emergency mode is active. Possible cause: travel measurement does not function properly.	–	–	–
Fail-in-place module activated	10.1.1.48	• 1)	•	Status indicators	–	–	–
Control valve diagnosis	10.1.1.49	• 1)	•	Status indicators	–	–	–
Friction change (open pos.)	10.1.1.50	• 1)	•	The friction conditions in the range of the valve's open position have changed.	–	–	–
Friction change (mid-position)	10.1.1.51	• 1)	•	The friction conditions in the range of the valve's mid-position have changed.	–	–	–
Friction change (closed pos.)	10.1.1.52	• 1)	•	The friction conditions in the range of the valve's closed position have changed.	–	–	–
Valve signature recording failed	10.1.1.53	• 1)	•	Conditions for a completed valve signature not fulfilled.	–	–	–
	10.1.1.54	• 1)	•	Confirm to clear message.	–	–	–
No supply pressure	10.1.1.55	• 1)	•	No supply pressure is available.	–	–	–
Low supply pressure	10.1.1.56	• 1)	•	Supply pressure is too low.	–	–	–
Supply pressure > 10 bar	10.1.1.57	• 1)	•	Supply pressure is too high.	–	–	–
PST	10.1.1.58	• 1)	•	Status indicators	–	–	–
PST: cancellation criteria met	10.1.1.59	• 1)	•	Partial stroke test (PST) canceled.	–	–	–
PST: start criteria not met	10.1.1.60	• 1)	•	Partial stroke test (PST) did not start.	–	–	–
FST	10.1.1.61	• 1)	•	Status indicators	–	–	–

Menu	Display reading	On-site: write	Diagnostics	Adjustment range/values [default setting]/ description	Reset		
					Initialization	Standard	Advanced
FST: cancellation criteria met	10.1.1.62	• [1)]	•	FST (full stroke test) canceled.	–	–	–
FST: start criteria not met	10.1.1.63	• [1)]	•	Full stroke test (FST) did not start.	–	–	–
Pneumatic module A (P3799 A)	10.1.1.64	• [1)]	•	Status indicators	–	–	–
P3799: failure	10.1.1.65	• [1)]	•	Error in pneumatic module. Replacement may be necessary.	–	–	–
	10.1.1.66	• [1)]	•	➔ Confirm to clear message.	–	–	–
P3799: movement impaired	10.1.1.67	• [1)]	•	Possible cause: no supply pressure, internal error, defect.	–	–	–
	10.1.1.68	• [1)]	•	➔ Confirm to clear message.	–	–	–
P3799: maintenance required	10.1.1.69	• [1)]	•	Possible cause: the friction conditions have changed.	–	–	–
	10.1.1.70	• [1)]	•	➔ Confirm to clear message.	–	–	–
P3799: initialization error	10.1.1.71	• [1)]	•	Conditions for initialization not fulfilled.	–	–	–
	10.1.1.72	• [1)]	•	➔ Confirm to clear message.	–	–	–
Pneumatic module B (P3799 B)	10.1.1.73	• [1)]	•	Status indicators	–	–	–
P3799: failure	10.1.1.74	• [1)]	•	Error in pneumatic module. Replacement may be necessary.	–	–	–
	10.1.1.75	• [1)]	•	➔ Confirm to clear message.	–	–	–
P3799: movement impaired	10.1.1.76	• [1)]	•	Possible cause: no supply pressure, internal error, defect.	–	–	–
	10.1.1.77	• [1)]	•	➔ Confirm to clear message.	–	–	–
P3799: maintenance required	10.1.1.78	• [1)]	•	Possible cause: the friction conditions have changed.	–	–	–
	10.1.1.79	• [1)]	•	➔ Confirm to clear message.	–	–	–
P3799: initialization error	10.1.1.80	• [1)]	•	Conditions for initialization not fulfilled.	–	–	–
	10.1.1.81	• [1)]	•	➔ Confirm to clear message.	–	–	–
AMR signal outside range	10.1.1.82	• [1)]	•	Travel measurement is defective.	–	–	–
	10.1.1.83	• [1)]	•	➔ Confirm to clear message.	–	–	–

Menu	Display reading	On-site: write	Diagnostics	Adjustment range/values [default setting]/ description	Reset		
					Initialization	Standard	Advanced
Hardware fault	10.1.1.84	• 1)	•	Internal device error. Initialization key (INIT) jammed. Contact SAMSON's After-sales Service.	–	–	–
Limit for total valve travel exceeded	10.1.1.85	• 1)	•	Limit for total valve travel exceeded.	–	–	–
Lower end position shifted	10.1.1.86	• 1)	•	Possible cause: mounting arrangement or travel linkage of positioner has slipped.	–	–	–
	10.1.1.87	• 1)	•	➔ Confirm to clear message.	–	–	–
Upper end position shifted	10.1.1.88	• 1)	•	Possible cause: mounting arrangement or travel linkage of positioner has slipped.	–	–	–
	10.1.1.89	• 1)	•	➔ Confirm to clear message.	–	–	–
Dynamic stress factor exceeded or Dynamic stress factor active 2)	10.1.1.90	• 1)	•	The limit is exceeded. It may be necessary to change the valve packing.	–	–	–
Set point deviation	10.1.1.91	• 1)	•	Control loop error, the valve no longer follows the controlled variable within tolerable times.	–	–	–
Brownout	10.1.1.92	• 1)	•	Brief power failure. The positioner remains ready for use.	–	–	–
	10.1.1.93	• 1)	•	➔ Confirm to clear message.	–	–	–
Current too low	10.1.1.94	• 1)	•	Set point <3.7 mA	–	–	–
IP shutdown	10.1.1.95	• 1)	•	Set point <3.85 mA	–	–	–
Current too high	10.1.1.96	• 1)	•	Set point >22 mA. The positioner remains ready for use.	–	–	–
Temperature inside device below min. limit	10.1.1.97	• 1)	•	Warning not affecting the positioner's functioning.	–	–	–
Temperature inside device above max. limit	10.1.1.98	• 1)	•	Warning not affecting the positioner's functioning.	–	–	–
Angle limitation	10.1.1.99	• 1)	•	The maximum permissible angle of rotation (±30°) has been exceeded (only in open-loop control mode).	–	–	–
	10.1.1.100	• 1)	•	➔ Confirm to clear message.	–	–	–
Logging suspended	10.1.1.101	• 1)	•	It was not possible to write all logging entries.	–	–	–
	10.1.1.102	• 1)	•	➔ Confirm to clear message.	–	–	–

Menu	Display reading	On-site: write	Diagnostics	Adjustment range/values [default setting]/ description	Reset		
					Initialization	Standard	Advanced
Operating range in CLOSED position	10.1.1.103	• [1]	•	The valve remains in the closed position. Possible cause: no supply pressure or actuator/ plug stem blocked.	–	–	–
Operating range in max. OPEN position	10.1.1.104	• [1]	•	The valve remains in the max. OPEN position. Possible cause: no supply pressure or actuator/ plug stem blocked.	–	–	–
Operating range shifting towards CLOSED position	10.1.1.105	• [1]	•	The operating range has shifted towards the CLOSED position. Possible cause: valve sized incorrectly.	–	–	–
Operating range shifting towards max. OPEN position	10.1.1.106	• [1]	•	The operating range has shifted towards the max. OPEN position. Possible cause: valve sized incorrectly.	–	–	–
Limited working range: lower range	10.1.1.107	• [1]	•	The valve position is restricted to the lower working range. Possible cause: no supply pressure or actuator/ plug stem blocked.	–	–	–
Limited working range: upper range	10.1.1.108	• [1]	•	The valve position is restricted to the upper working range. Possible cause: no supply pressure or actuator/ plug stem blocked.	–	–	–
Fail-in-place module failed	10.1.1.111	• [1]	•	The fail-in-place module is defective.	–	–	–

[1] Reading only when active
[2] Different designations used in the SAMSON TROVIS-VIEW software and DD/DTM/EDD.

16.2.5 Reset functions

Menu	Display reading	On-site: write	Diagnostics	Adjustment range/values [default setting]/description
Reset functions	**14**	•	•	
Reset diagnosis	14.1	•	•	Resets all diagnostic functions including graphs and histograms.
Reset (standard)	14.2	•	•	Resets the positioner to the state as upon delivery. Actuator and valve-specific settings remain unchanged.
Reset (advanced)	14.3	•	•	All parameters will be reset to their defaults adjusted upon delivery.
Restart	14.6	•	•	The positioner is shut down and restarted.
Reset in progress	–	•	•	Indicates whether the reset function is active or not.
Reset reports	**14.10**	•	–	
Delete PST reports	14.10.1	•	•	The reports and graphs of all saved partial stroke tests are deleted.
Delete FST reports	14.10.2	•	•	The reports and graphs of all saved full stroke tests are deleted.
Reset dead band data	–	–	•	The reports, measured data and graphs for the dead band test are deleted.
Reset course of end position	–	–	•	The measured data of the course of the lower and upper end positions are deleted.
Reset histograms	–	–	•	The measured data and archived data of the histograms (valve position, set point deviation and load cycle) are deleted.
Reset initialization	14.15	•	•	All parameters for the start-up settings are reset. The positioner needs to be re-initialized afterwards.
Reset logging	–	–	•	Logged events, alarms and alerts are deleted.
Reset monitoring values	–	–	•	The measured data recorded for the valve signature (statistical information) are deleted.
Reset course of supply pressure	–	–	•	The measured data for the course of the supply pressure are reset.

16.3 Valve characteristic selection

The characteristics that can be selected in menu item **8.1.9** are shown in the following in graph form.

i ***Note***

A characteristic can only be defined (user-defined characteristic) using an operating software (e.g. SAMSON's TROVIS-VIEW or DD/DTM/EDD).

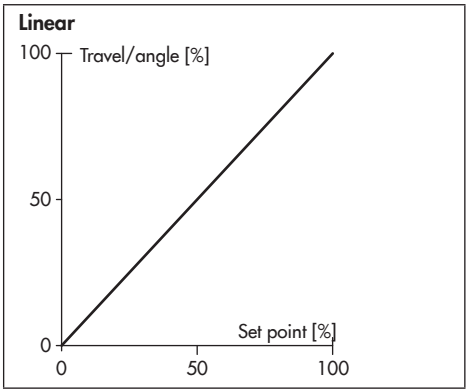

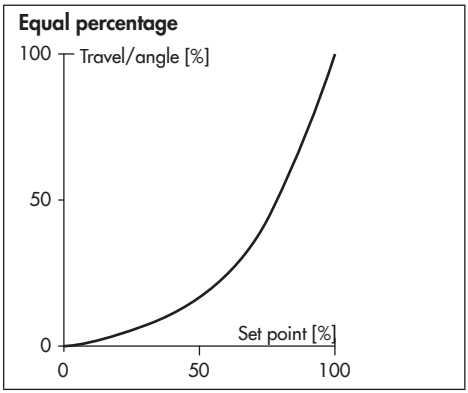

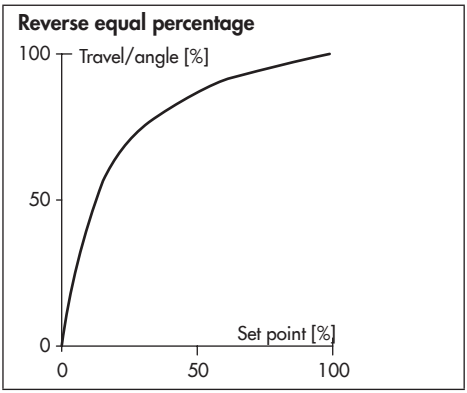

Butterfly valve, linear

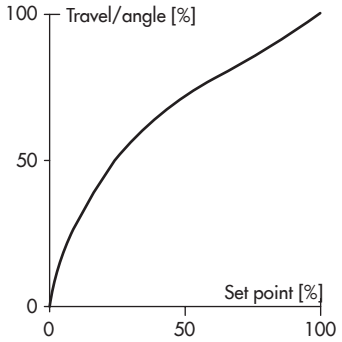

Butterfly valve, equal percentage

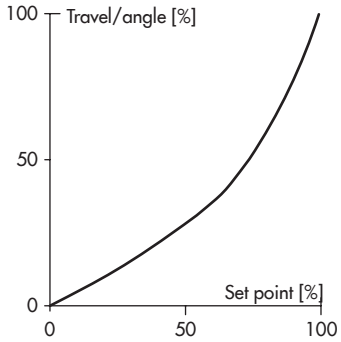

Rotary plug valve, linear

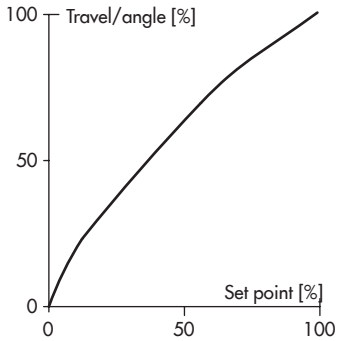

Rotary plug valve, equal percentage

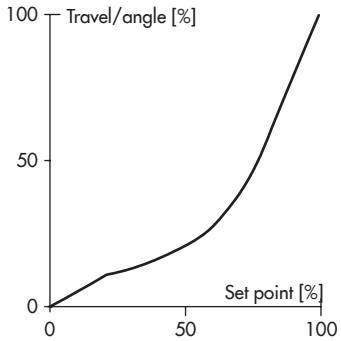

Segmented ball valve, linear

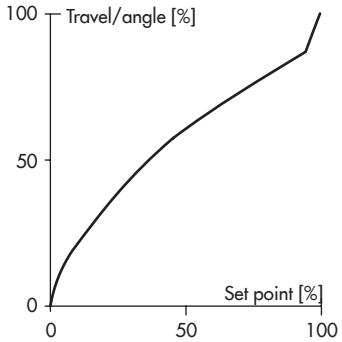

Segmented ball valve, equal percentage

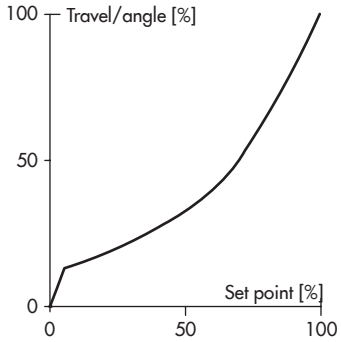

17 Appendix B

17.1 After-sales service

Contact our after-sales service for support concerning service or repair work or when malfunctions or defects arise.

You can reach our after-sales service at aftersalesservice@samsongroup.com.

Addresses of SAMSON AG and its subsidiaries

The addresses of SAMSON AG, its subsidiaries, representatives and service facilities worldwide can be found on our website (www.samsongroup.com) or in all SAMSON product catalogs.

Required specifications

Please submit the following details:

- Order number and position number in the order
- Model number, configuration ID, serial number, firmware version (see the 'Markings on the device' chapter for nameplate details)

EB 8493 EN

SAMSON AKTIENGESELLSCHAFT
Weismüllerstraße 3 · 60314 Frankfurt am Main, Germany
Phone: +49 69 4009-0 · Fax: +49 69 4009-1507
samson@samsongroup.com · www.samsongroup.com

2026-04-01 · English